Please dispose of packaging for the product in a responsible manner. It is suitable for recycling. Help to protect the environment, take the packaging to the local amenity tip and place into the appropriate recycling bin.

Never dispose of electrical equipment or batteries in with your domestic waste. If your supplier offers a disposal facility please use it or alternatively use a recognised re-cycling agent. This will allow the recycling of raw materials and help protect the environment.

FOR HELP OR ADVISE ON THIS PRODUCT PLEASE CONTACT YOUR DISTRIBUTOR, OR SIP DIRECTLY ON:
TEL: 01509500400
EMAIL: sales@sip-group.com or technical@sip-group.com
www.sip-group.com

Ref: 09AUG2021

SIP INDUSTRIAL

machinery specialists since 1968

12” Metal Cutting Bandsaw

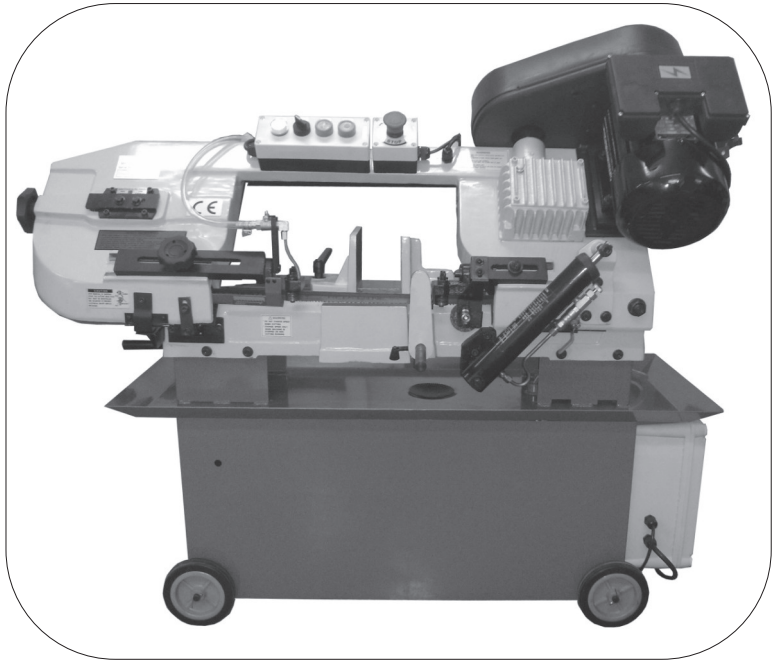

01594 & 01595

Please read and fully understand the instructions in this manual before operation. Keep this manual safe for future reference.

Declaration of Conformity

We

SIP (Industrial Products) Ltd
Gelders Hall Road
Shepshed
Loughborough
Leicestershire
LE12 9NH
England

As the manufacturer's authorised representative within the EC
declare that the

12” Metal Cutting Bandsaw 1ph - SIP Pt. No. 01594
12” Metal Cutting Bandsaw 3ph - SIP Pt. No. 01595

Conforms to the requirements of the following directive(s), as indicated.

2006/95/EC	Low Voltage Directive
2006/42/EC	Machinery Directive
2004/108/EC	EMC Directive
2011/65/EU & (EU)2015/863	RoHS Directive

And the relevant harmonised standard(s)

EN 55014-1:2017+A11
EN 55014-2:2015
EN IEC 61000-3-2:2019
EN 61000-3-3:2013+A1

Signed: ……...

Mr P. Ippaso - Managing Director - SIP (Industrial Products)
Ltd Date: 09/08/2021.

Declaration of Conformity

We

SIP (Industrial Products) Ltd
Gelders Hall Road
Shepshed
Loughborough
Leicestershire
LE12 9NH
England

As the manufacturer within the UK, England, Scotland & Wales, declare that the

12" Metal Cutting Bandsaw 230v - SIP Code 01594
12"Metal Cutting Bandsaw 400v - SIP Code 01595

Conforms to the requirements of the following directive(s), as indicated.

Supply of Machinery (Safety) Regulations 2008
Electrical Equipment (Safety) Regulations 2016
Electromagnetic Compatibility Regulations 2016
The Restriction of the Use of Certain Hazardous Substances in Electrical and Electronic Equipment Regulations 2012

And the relevant harmonised standard(s), including

BS EN 55014-1:2017+A11
BS EN 55014-2:2015
BS EN IEC 61000-3-2:2019
BS EN 61000-3-3:2013+A1

Signed: .....

Mr P. Ippaso - Director - SIP (Industrial Products) Ltd
Date: 09/08/2021

UK CA

Page No.	Description
4.	Safety Symbols Used Throughout This Manual
4.	Safety Instructions
8.	Electrical Connection
9.	Guarantee
10.	Technical Specifications
10.	Contents & Accessories
11.	Getting to Know Your Bandsaw
13.	Assembly Instructions
14.	Operating Instructions
20.	Maintenance Instructions
24.	Troubleshooting
24.	Wiring Diagram
27.	Exploded Diagram
29.	Parts List
33.	Notes
34 & 35	UK & EU Declaration Of Conformity

SAFETY SYMBOLS USED THROUGHOUT THIS MANUAL

Danger / Caution: Indicates risk of personal injury and/or the possibility of damage.

Warning: Risk of electrical injury or damage!

Note: Supplementary information.

SAFETY INSTRUCTIONS

READ INSTRUCTIONS BEFORE USE

IMPORTANT: Please read the following instructions carefully, **failure to do so could lead to serious personal injury and / or damage to the bandsaw.**

When using your bandsaw, basic safety precautions should always be followed to reduce the risk of personal injury and / or damage to the bandsaw.
Read all of these instructions before operating the bandsaw and save this user manual for future reference.
The bandsaw should ***not*** be modified or used for any application other than that for which it was designed.
Do not use this bandsaw for anything other than its intended purpose; this bandsaw is designed for metal cutting work in engineering workshops, garages, metal fabricators, etc.
If you are unsure of its relative applications do not hesitate to contact us and we will be more than happy to advise you.
Before operating the bandsaw always check no parts are broken, and that no parts are missing.
Always operate the bandsaw safely and correctly.
KNOW YOUR BANDSAW: Read and understand the owner's manual and labels affixed to the bandsaw. Learn its applications and limitations, as well as the potential hazards specific to it.
KEEP CHILDREN AND UNTRAINED PERSONNEL AWAY FROM THE WORK AREA: All visitors should be kept at a safe distance from the work area; never allow untrained persons to operate the bandsaw.
STAY ALERT: Always watch what you are doing and use common sense.
NEVER LEAVE THE BANDSAW UNATTENDED: When in use, or connected to the mains

NOTES

Ref. No.	Description	SIP Part No.	Ref. No.	Description	SIP Part No.
172.	Bearing cover	WK04-00124	**192.**	Nut M8	WK04-00015
173.	Circlip	WK04-00125	**193.**	Motor key	WK04-00138
174.	Bearing 6003ZZ	WK04-00126	**194.**	Belt guard screw	WK04-00139
175.	Oil seal 35x17x7	WK04-00127	**195.**	Belt guard	WK04-00140
176.	Worm sleeve	WK04-00128	**196.**	Pulley screw M8x10	WK04-00141
177.	Worm shaft	WK04-00129	**197.**	Worm pulley	WK04-00142
178.	Side support	WK04-00130	**198.**	Pulley screw M8x10	WK04-00141
179.	Washer M6	WK04-00011	**199.**	Motor pulley	WK04-00143
180.	Bolt M6x12	WK04-00038	**200.**	Belt	WK04-00144
181.	Motor plate holder	WK04-00131	**201.**	Washer M6	WK04-00011
182.	Bolt M8x40	WK04-00132	**202.**	Bolt M6x12	WK04-00038
183.	Washer M8	WK04-00014	**203.**	Vertical table	WK04-00145
184.	Washer M8	WK04-00014	**N/A**	QF1 Breaker 1ph	WK04-00146
185.	Bolt M8x20	WK04-00068	**N/A**	QF1 Breaker 3ph	WK04-00147
186.	Bolt M8x50	WK04-00133	**N/A**	QF2 Breaker 1 & 3ph	WK04-00148
187.	Nut M8	WK04-00015	**N/A**	QF3 Breaker 1 & 3ph	WK04-00149
188.	Motor plate	WK04-00134	**N/A**	Contactor CN6 1 & 3ph	WK04-00150
189.	Motor 1ph	WK04-00135	**N/A**	Thermal relay 1ph 5.5-8.5A	WK04-00151
189.	Motor 3ph	WK04-00136	**N/A**	Thermal relay 3ph 2.4-3.6A	WK04-00152
190.	Bolt M8x25	WK04-00137	**N/A**	Transformer 1 & 3ph	WK04-00153
191.	Washer M8	WK04-00014	**N/A**	Blade guard microswitch	WK04-00154

supply.

KEEP WORK AREA CLEAN AND WELL LIT: Cluttered work areas and dark areas invite accidents. Floors must not be slippery due to oil, water or sawdust etc.

HAVE YOUR BANDSAW REPAIRED BY A QUALIFIED PERSON: The bandsaw is in accordance with the relevant safety requirements. Repairs should only be carried out by qualified persons using original spare parts, otherwise this may result in considerable danger to the user and void the warranty.

DANGER! Check that the bandsaw is in sound condition and good working order before each use; Take immediate action to repair or replace faulty / damaged parts.

WARNING! Only operate on a level and stable surface.

WARNING! RISK OF ELECTRIC SHOCK. Do not expose the bandsaw to water spray, rain, dripping water or moisture of any kind.

PROTECT YOURSELF FROM ELECTRIC SHOCK: When working with power tools, avoid contact with any earthed items (e.g. pipes, radiators, hobs and refrigerators, etc.). It is advisable wherever possible to use an RCD (residual current device) at the supply socket.

DO NOT ABUSE THE MAINS LEAD: Never pull the mains lead to remove the plug from the mains socket, or to move the bandsaw from place to place. Keep the mains lead away from heat, oil and sharp edges. If the mains lead is damaged, it must be replaced by the manufacturer or its service agent or a similarly qualified person in order to avoid unwanted hazards.

ALWAYS check that the belt guard and blade guards are in place, adjusted correctly, undamaged and firmly attached.

NEVER STAND ON THE BANDSAW: The bandsaw is not designed for this purpose.

DO NOT dismantle, tamper with or modify the bandsaw, as this may be dangerous and will invalidate the warranty.

SECURE THE WORK-PIECE: Use the vice to hold the work-piece; this frees up both hands to operate the saw.

REMOVE ADJUSTING KEYS AND WRENCHES: Form a habit of checking to see that keys and adjusting tools are removed from the bandsaw before every use.

- If a problem with the bandsaw is experienced or suspected stop using the bandsaw ***immediately*** and contact your distributor for repair.
- Regularly inspect the bandsaw, ensuring that it is in good working order and condition.
- Always ensure that the work area is clean, tidy and free from unrelated materials.
- Keep away from flammable objects, materials & surfaces, use in a location where accidental contact (particularly by children) is unlikely.
- Ensure on/off switches are switched to off (0) before connecting mains lead to the power supply.
- Keep the work area clean and clear of possible tripping hazards.
- Keep children and unauthorised persons away from the bandsaw, as it has a sharp blade!
- Disconnect from the mains before moving or attempting any cleaning or mainte-

nance.

- Keep hands and all other body parts away from the blade.
- Failure to follow the warnings in this manual, may result in personal injury and/or property damage.
- Turn the bandsaw off and disconnect it from the mains supply when moving from one location to another.
- Never operate the bandsaw without all guards in place.
- ***DO NOT*** get the bandsaw wet or use in damp or wet locations or areas where there is condensation.
- ***DO NOT*** move the bandsaw whilst in operation.
- ***DO NOT*** remove the blade guard or belt guard whilst the bandsaw is switched on.
- ***DO NOT*** allow unqualified persons to disassemble the bandsaw for any reason, the bandsaw must be checked by qualified personnel only.
- ***DO NOT*** use the bandsaw without the blade guard and belt guard closed, as this will lead to personal injury to you or others!
- ***Warning*** if a fuse blows, ensure it is replaced with the correct fuse type and rating.
- ***DO NOT*** place any objects on the safety guard or on the covers at any time.
- When not in use, store the bandsaw carefully in a safe, dry, childproof location.
- ***NEVER*** cover the bandsaw during operation or whilst it cools after operation.
- Be aware of moving parts that occur during normal operation of this bandsaw.
- ***NEVER*** operate the bandsaw with damaged, broken or missing parts, or with any guards or covers removed.
- ***DO NOT*** operate the bandsaw or any electrical items with wet hands.
- Keep the floor around the machine clean and free of scrap material, oil and grease.
- ***ALWAYS*** keep the machine guards in place at all times when the machine is in operation, if removed for maintenance then use extreme caution, always refit the guards immediately after any maintenance.
- ***DO NOT*** over reach, always maintain a balanced stance so that you do not fall or lean into any moving parts.
- Keep all visitors at a safe distance.
- ***ALWAYS*** keep hands and fingers away from the blade when in operation.
- ***ALWAYS*** use the vice to secure your material, never cut any material without using the vice; this is extremely dangerous!
- ***ALWAYS*** have the belt guard closed at all times when the machine is in operation, failure to do this can lead to personal injury.
- ***ALWAYS*** use adequate roller stands for supporting longer and heavier materials.
- ***ALWAYS*** use the correct blade, using the correct tpi blade for cutting the material will make your job easier, and the blade last longer, using the wrong tpi blade will make a rough cut and will decrease the life of the blade.
- ***NEVER*** force the blade through the material, this will decrease the life of the blade.
- ***ALWAYS*** keep the bandsaw as clean as possible and keep blades sharp for best

Ref. No.	Description	SIP Part No.	Ref. No.	Description	SIP Part No.
117.	Bolt M8x35	WK04-00082	**144-1.**	Sleeve A	WK04-00102
118.	Washer M8	WK04-00014	**144-2.**	Sleeve B	WK04-00103
119.	Adjustable bracket	WK04-00083	**144-3.**	Sleeve C	WK04-00104
120.	Adjustable bracket screw	WK04-00084	**145.**	Spring	WK04-00105
121.	Copper pipe	WK04-00085	**146.**	Bolt M6x6	WK04-00028
122.	Bolt M6x6	WK04-00028	**147.**	Switch	WK04-00106
123.	Copper pipe support	WK04-00086	**148.**	Bolt M10x25	WK04-00107
124.	Coolant tap	WK04-00087	**149.**	Washer M10	WK04-00046
125.	Bolt M8x30	WK04-00018	**150.**	Key 6x25	WK04-00108
126.	Nut M10	WK04-00052	**151.**	Bushing	WK04-00109
126.1.	Washer M10	WK04-00046	**152.**	Gearbox housing	WK04-00110
127.	Pin	WK04-00088	**152.1.**	Bolt M8x16	WK04-00013
128.	Bolt M4x6	WK04-00089	**153.**	Bearing 6005ZZ	WK04-00111
129.	Bearing 608ZZ	WK04-00090	**154.**	Circlip	WK04-00112
130.	Fixed bearing shaft	WK04-00091	**155.**	Oil seal 47x25x7	WK04-00113
131.	Eccentric bearing shaft	WK04-00092	**156.**	Seal	WK04-00114
132.	Bearing 608ZZ	WK04-00090	**157.**	Worm gear shaft	WK04-00115
133.	Washer M8	WK04-00014	**157.1.**	Key 6x25	WK04-00116
134.	Bolt M5x12	WK04-00093	**158.**	Circlip	WK04-00117
135.	Front plate	WK04-00094	**159.**	Worm gear	WK04-00118
136.	Bolt M8x30	WK04-00018	**160.**	Gearbox cover gasket	WK04-00119
137.	Right guide holder	WK04-00095	**161.**	Gearbox cover	WK04-00120
137.1.	Left guide holder	WK04-00096	**162.**	Washer M6	WK04-00011
138.	Right guide bracket	WK04-00097	**163.**	Bolt M6x20	WK04-00016
139.	Large washer M10	WK04-00098	**164.**	Oil drain bolt	WK04-00121
140.	Bolt M10x40	WK04-00056	**168.**	Upper support for hydraulic cylinder	WK04-00122
141.	Bolt M5x10	WK04-00099	**169.**	Washer M8	WK04-00014
142.	Brush holder	WK04-00100	**170.**	Bolt M8x30	WK04-00018
143.	Brush	WK04-00101	**171.**	Bolt M4x12	WK04-00123

Ref. No.	Description	SIP Part No.	Ref. No.	Description	SIP Part No.
65.	Movable vice jaw	WK04-00047	**92.1.**	Washer M8	WK04-00014
66.	Bolt M12x40	WK04-00048	**93.**	Bolt M10x45	WK04-00065
67.	Washer M12	WK04-00049	**94.**	Washer M10	WK04-00046
68.	Fixed vice jaw	WK04-00050	**94.1.**	Nut M10	WK04-00052
69.	Bolt M10x20	WK04-00051	**95.**	Bolt M8x16	WK04-00013
70.	Washer M10	WK04-00046	**96.**	Washer M8	WK04-00014
71.	Nut M10	WK04-00052	**97.**	Blade guard	WK04-00066
72.	Spring support	WK04-00053	**97.1.**	Pulley cover	WK04-00067
73.	Bolt	WK04-00054	**98.**	Bolt M8x16	WK04-00013
74.	Spring	WK04-00055	**99.**	Washer M8	WK04-00014
75.	Bolt M10x40	WK04-00056	**100.**	Bolt M8x20	WK04-00068
76.	Nut M10	WK04-00052	**101.**	Large washer M8	WK04-00069
77.	Bolt M10x35	WK04-00045	**102.**	Bearing 6203ZZ	WK04-00070
78.	Pivot arm plate	WK04-00057	**103.**	Idle blade pulley	WK04-00071
79.	Pivot arm	WK04-00058	**103.1.**	Drive blade pulley	WK04-00072
80.	Bed shaft	WK04-00059	**104.**	Blade	Contact Distributor
81.	Sleeve	WK04-00060	**105.**	Idle pulley sleeve	WK04-00073
82.	Washer M16	WK04-00061	**106.**	Saw bow	WK04-00074
83.	Nut M10	WK04-00052	**107.**	Blade tensioning knob	WK04-00075
84.	Support	WK04-00062	**108.**	Spring	WK04-00076
85.	Bolt M10x40	WK04-00056	**109.**	Plate	WK04-00077
86.	Nut M10	WK04-00052	**110.**	Washer M6	WK04-00011
87.	Bolt M10x35	WK04-00045	**111.**	Bolt M6x16	WK04-00010
88.	Washer M10	WK04-00046	**112.**	Idle pulley shaft	WK04-00078
89.	Bottom support for hydraulic cylinder	WK04-00063	**113.**	Idle pulley shaft seat	WK04-00079
90.	Bolt M8x30	WK04-00018	**114.**	Pin 4x20	WK04-00080
91.	Shaft for hyd. cylinder	WK04-00064	**115.**	Moving plate	WK04-00081
92.	Bolt M8x16	WK04-00013	**116.**	Bolt M8x16	WK04-00013

and safest performance.

- ***ALWAYS*** wear approved eye and ear protection when operating the machine.
- If any dust is produced, wear an approved face or dust mask.
- ***WARNING!*** round bar and tubing have a tendency to roll whilst being cut and can cause the blade to slip, ***DO NOT*** cut such items without clamping or blocking the material.
- ***DO NOT*** start the bandsaw until the material is secure and the blade has been lowered to just above the material.
- ***NEVER*** use damaged or deformed bandsaw blades.
- ***ALWAYS*** secure the material that is too be cut in the vice.
- ***NEVER*** use the bandsaw with the blade guard or pulley cover removed.
- ***DO NOT*** use whilst under the influence of drugs, alcohol or other intoxicating medication.
- ***NEVER*** start the bandsaw with the blade in contact with the workpiece.
- ***ALWAYS*** allow the bandsaw to reach full speed before commencing the cutting operation.
- ***NEVER*** use this bandsaw for any application other than that specified by the manufacturer.
- Never operate this bandsaw under conditions not approved by the manufacturer.
- Before using or servicing your bandsaw, read and understand all instructions. Failure to follow safety precautions or instructions can cause equipment damage and/or serious personal injury.
- ***WEAR THE CORRECT CLOTHING.*** Do not wear loose clothing, neckties, rings, bracelets, or other jewellery, which may get caught in moving parts. Non-slip footwear is recommended. Wear protective hair covering to contain long hair. Roll long sleeves up above the elbow.
- If the bandsaw is used in a place of work all rules and laws etc. relating to the use of portable electrical appliances should be followed.

When using the saw, particularly during extended periods; ensure the operator as well as those in the area wear ear protection.

When using the saw always ensure the operator as well as those in the area wear eye protection.

Some materials have the potential to be highly toxic; always wear a face mask when operating the saw.

CAUTION: The warnings and cautions mentioned in this user manual can not cover all possible conditions and situations that may occur. It must be understood by the operator that common sense and caution are factors which cannot be built into this product, but must be applied.

ELECTRICAL CONNECTION

WARNING! It is the responsibility of the owner and the operator to read, understand and comply with the following:

You must check all electrical products, before use, to ensure that they are safe.
You must inspect power cables, plugs, sockets and any other connectors for wear or damage.
You must ensure that the risk of electric shock is minimised by the installation of appropriate safety devices; A residual current circuit Breaker (RCCB) should be incorporated in the main distribution board. We also recommend that a residual current device (RCD) is used. It is particularly important to use an RCD with portable products that are plugged into a supply which is not protected by an RCCB. If in any doubt consult a qualified electrician.

Connecting to the 1 phase power supply:

This SIP bandsaw is fitted with a standard 230v ~ 13 amp type plug. Before using the bandsaw, inspect the mains lead and plug to ensure that neither are damaged. If any damage is visible have the bandsaw inspected / repaired by a suitably qualified person. If it is necessary to replace the plug a heavy duty impact resistant plug would be preferable.

The wires for the 1 phase plug are coloured in the following way:

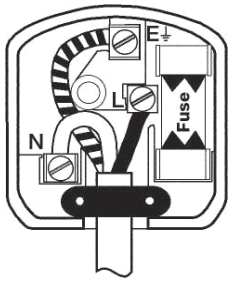

Yellow / green	Earth
Blue	Neutral
Brown	Live

As the colours of the wires may not correspond with the markings in your plug, proceed as follows: The wire which is coloured blue, must be connected to the terminal marked with N or coloured black. The wire which is coloured brown, must be connected to the terminal, which is marked L or coloured red. The wire which is coloured yellow / green should be connected to the terminal which is coloured the same or marked

Always secure the wires in the plug terminal carefully and tightly. Secure the cable in the cord grip carefully.

Connecting to the 3 phase power supply:

The 3ph bandsaw comes with no plug fitted, the cable will have 3 phases and an earth, this should be, where possible, hard wired into the mains board, always use a

PARTS LIST

Ref. No.	Description	SIP Part No.	Ref. No.	Description	SIP Part No.
1.	Bottom pan	WK04-00001	37.	Hose	WK04-00025
2.	Left leg	WK04-00002	38.	Handle	WK04-00026
3.	Right leg	WK04-00003	39.	Vice hand-wheel	WK04-00027
4.	Front panel	WK04-00004	40.	Bolt M6x6	WK04-00028
5.	Middle pan	WK04-00005	41.	Key 5x20	WK04-00029
6.	Wheel 125x12mm	WK04-00006	42.	Lead screw	WK04-00030
7.	Pin 25x3	WK04-00007	43.	Acme nut seat	WK04-00031
8.	Axle	WK04-00008	44.	Bolt M6x16	WK04-00010
14.	Hydraulic cylinder	WK04-00009	45.	Acme nut	WK04-00032
17.	Bolt M6x16	WK04-00010	46.	Pin	WK04-00033
18.	Washer M6	WK04-00011	47.	Spring screw	WK04-00034
19.	Nut M6	WK04-00012	48.	Bolt M5x8	WK04-00035
20.	Bolt M8x16	WK04-00013	49.	End of cut microswitch housing	WK04-00036
21.	Washer M8	WK04-00014	50.	End of cut microswitch	WK04-00037
22.	Nut M8	WK04-00015	51.	Washer M6	WK04-00011
23.	Bolt M6x20	WK04-00016	52.	Bolt M6x12	WK04-00038
25.	Filter	WK04-00017	53.	Thumb screw for cut off stop	WK04-00039
26.	Nut M6	WK04-00012	54.	Cut off stop	WK04-00040
27.	Bolt M8x30	WK04-00018	55.	Cut off stop shaft	WK04-00041
28.	Washer M8	WK04-00014	56.	Bolt M8x16	WK04-00013
29.	Nut M8	WK04-00015	57.	Washer M8	WK04-00014
31.	Coolant tank	WK04-00020	58.	Nut M8	WK04-00015
32.	Hose	WK04-00021	59.	Support plate	WK04-00042
33.	Coolant pump 1 phase	WK04-00022	60.	Bolt M8x30	WK04-00018
33.	Coolant pump 3 phase	WK04-00330	61.	Bed	WK04-00043
34.	Bolt M6x16	WK04-00010	62.	Lever lock	WK04-00044
35.	Hose fitting	WK04-00023	63.	Bolt M10x35	WK04-00045
36.	Hose clamp	WK04-00024	64.	Washer M10	WK04-00046

EXPLODED DIAGRAM….cont

SAW BOW

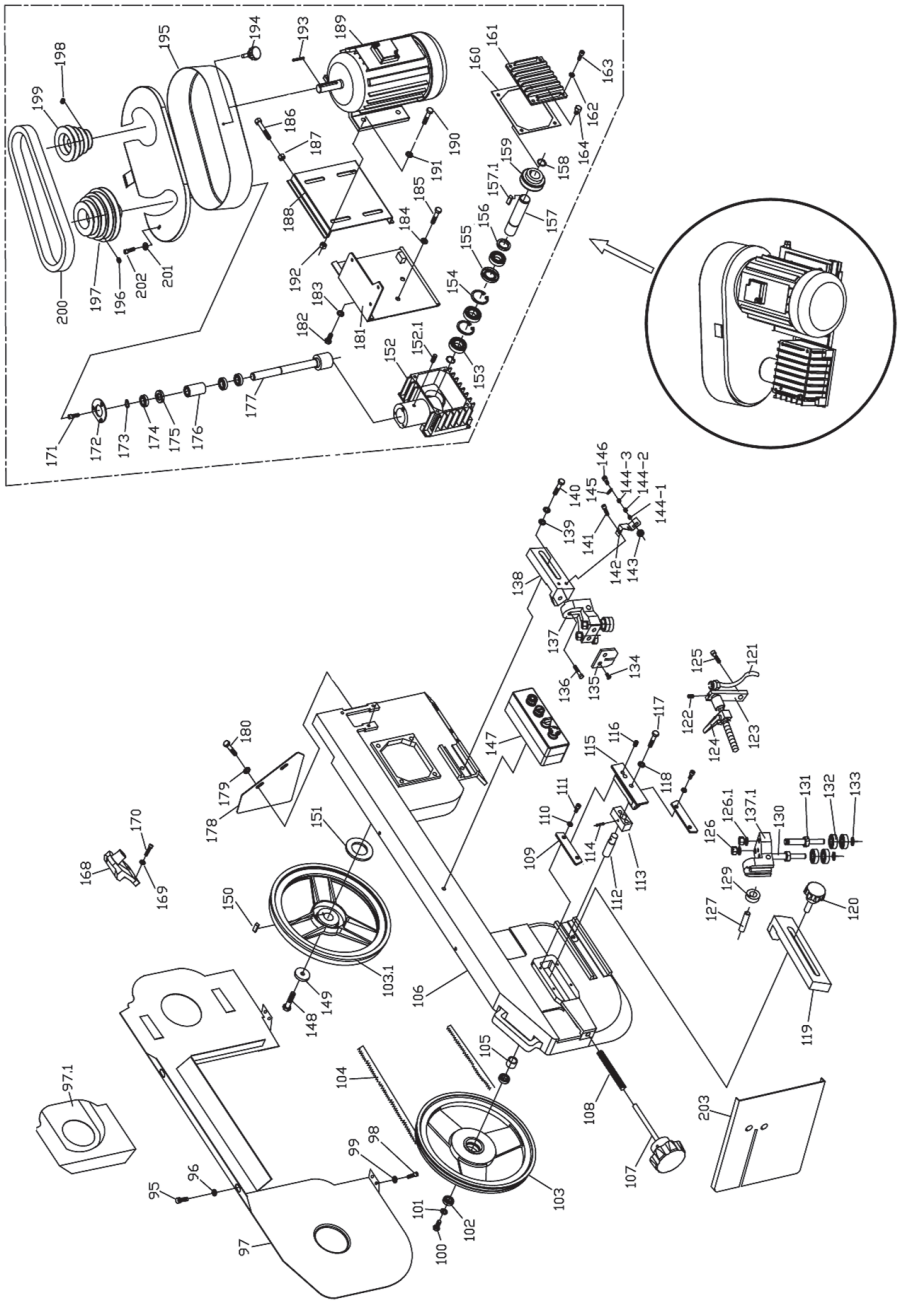

ELECTRICAL CONNECTION….cont

qualified electrician to wire in the bandsaw correctly.

The wires on the 3 phase mains lead are coloured in the following way:

Yellow / green	Earth
Blue/Grey	Phase
Brown	Phase
Black	Phase

Warning: Always use a qualified electrician to wire in the 3ph bandsaw, never wire the bandsaw without any knowledge of electrics, this is extremely dangerous and will cause personal injury or even death.

Warning: Never connect any phase wires to the earth terminal of the plug or bosrd. Only fit an approved plug with the correct rated fuse. If in doubt consult a qualified electrician.

Note: Always make sure the mains supply is of the correct voltage and the correct fuse protection is used.

Note: If an extension lead is necessary in order to reach the mains supply; The cross section should be checked so that it is of sufficient size so as to reduce the chances of voltage drops. Always fully unwind the lead during use.

GUARANTEE

This SIP bandsaw is covered by a 12 month parts and labour warranty covering failure due to manufacturers defects. This does not cover failure due to misuse or operating the bandsaw outside the scope of this manual - any claims deemed to be outside the scope of the warranty may be subject to charges Including, but not limited to parts, labour and carriage costs.

This guarantee does not cover consumables such as bearings, oil, blade, etc.

In the unlikely event of warranty claims, contact your distributor as soon as possible. Proof of purchase will be required before any warranty can be honoured.

Note: Proof of purchase will be required before any warranty can be honoured.

TECHNICAL SPECIFICATION

Name	12" Metal Cutting Bandsaw 1PH	12" Metal Cutting Bandsaw 3PH
Part number	01594	01595
Input Voltage	230v	400v
Circular 45°	127mm	127mm
Circular 90°	178mm	178mm
Rectangle 45°	120 x 125mm	120 x 125mm
Rectangle 90°	178 x 305mm	178 x 305mm
Blade speed	22, 33, 45 & 65 mtr/min	22, 33, 45 & 65 mtr/min
Blade size	2362 x 0.9 x 19mm	2362 x 0.9 x 19mm
Motor power	1.5HP (1.1kw)	1HP (750w)
Drive	V-belt	V-belt
Packed dimensions	1250 x 450 x 1150mm	1250 x 450 x 1150mm
Net weight	170 kg	170 kg
Gross weight	192 kg	192 kg

CONTENTS & ACCESSORIES

A	Manual
B	Wheel Set
C	Cut off stop
D	Cut off stop thumb screw
E	Split pin
F	Cut off stop shaft
G	Axle

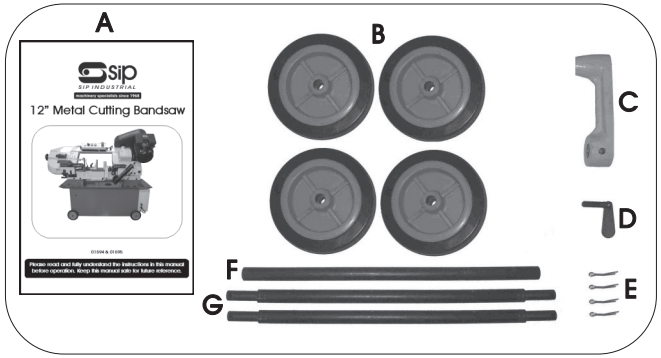

Note: If any of the above are missing or damaged, contact your distributor immediately.

EXPLODED DIAGRAM

SAW BASE

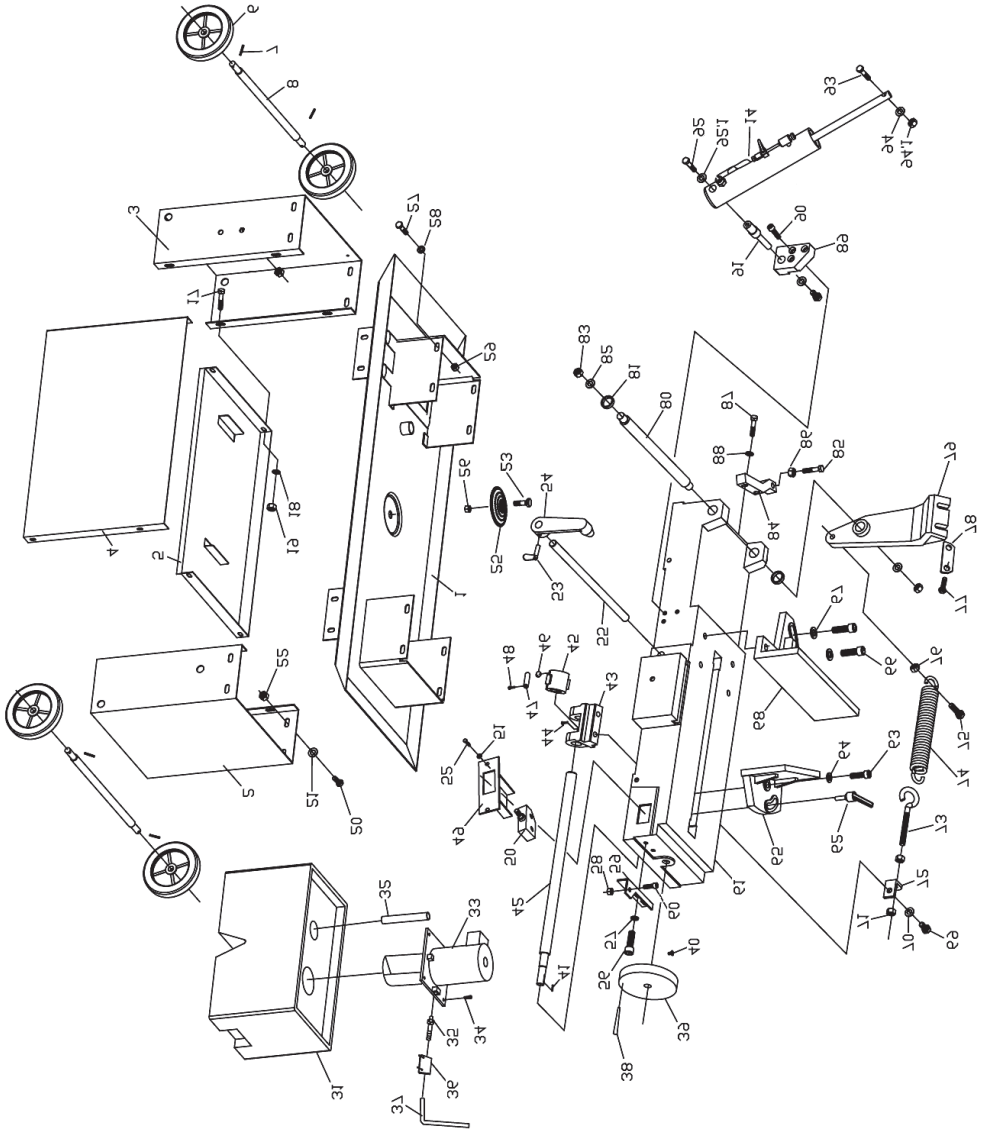

WIRING DIAGRAM….cont

3 PHASE WIRING

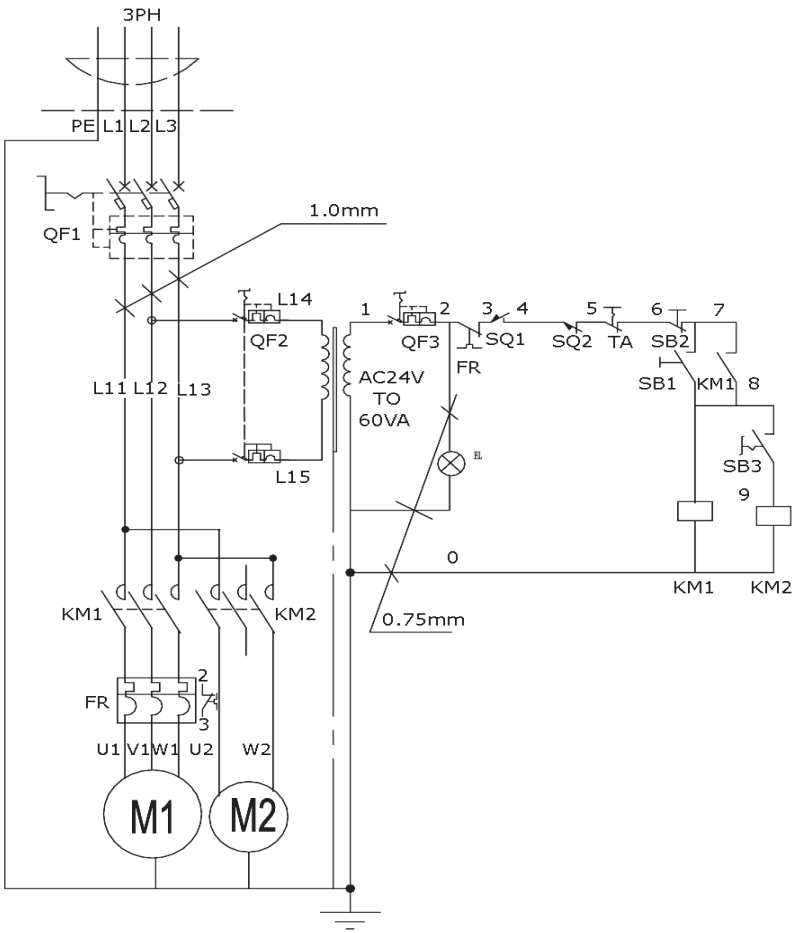

Description	Reference	Specification	Description	Reference	Specification
Main motor	M1	50hZ 3ph	Contactor	KM	CN6 AC24v 50Hz
Coolant pump	M2	230/400v 50Hz 40w	Heat relay	FR	RHM-5M 2.4-3.6A
Transformer	TC	AC400,230 24v	Limit switch	SQ1	QKS7 250V 10A
Current breaker	QF1	DZ47-63 2P 10A	Interlocking switch	SQ2	QKS8 250V 10A
Current breaker	QF2	DZ47-63 2P 2A	Start	SB	XB2-BE101
Current breaker	QF3	DZ47-63 1P 1A	Stop	SA1	XB2-BE102
Switch	TA	XB2-BX542	Start	SA2	XB2-ED21
Indicator light	EL	XB2-BVD3			

GETTING TO KNOW YOUR BANDSAW

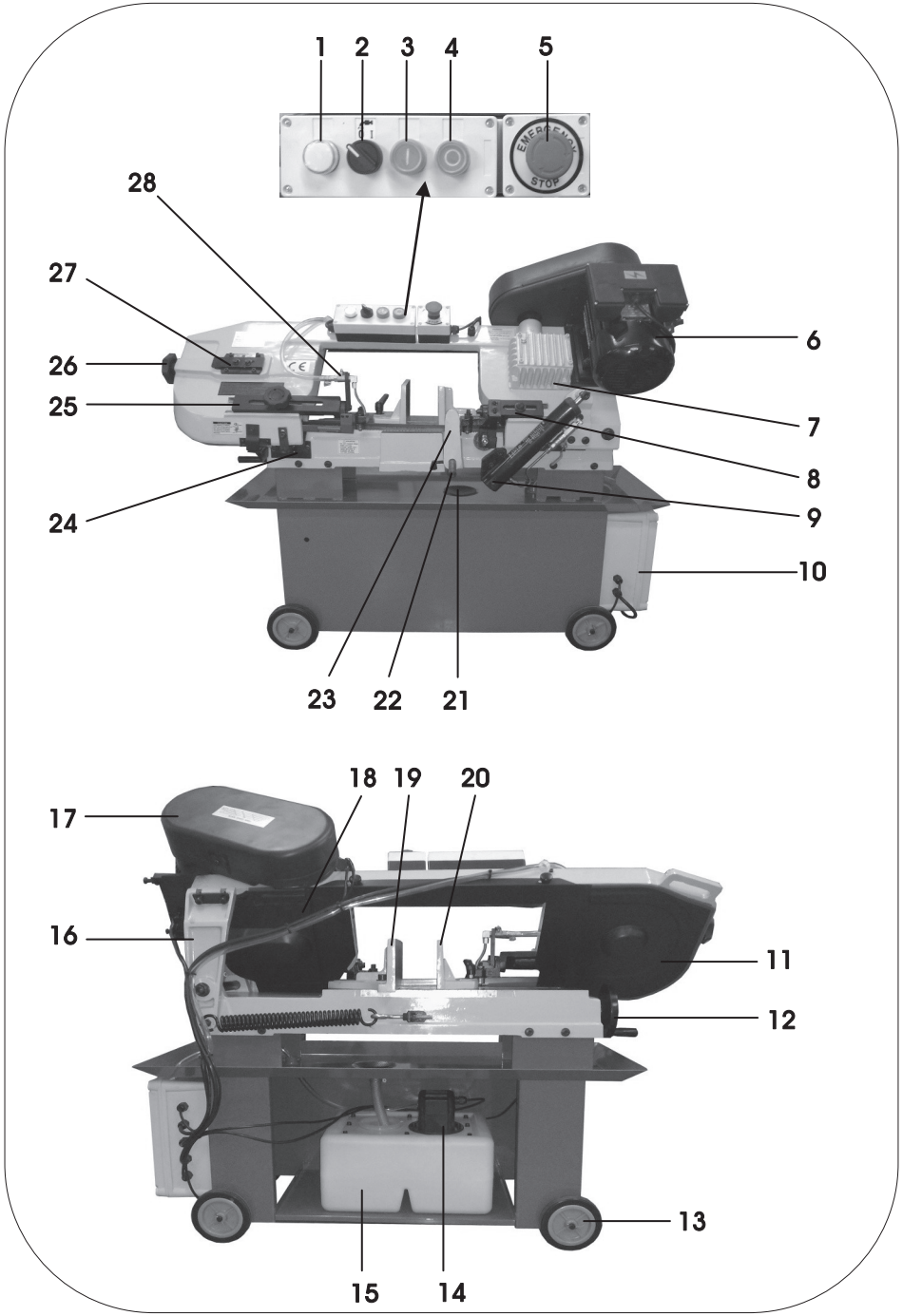

GETTING TO KNOW YOUR BANDSAW….cont

Ref.	Description	Ref.	Description
1.	Power on light	15.	Coolant tank
2.	Coolant pump switch	16.	Pivot arm
3.	Start switch	17.	Belt guard
4.	Stop switch	18.	Moveable blade guard
5.	Emergency stop button	19.	Fixed vice jaw
6.	Motor	20.	Moving vice jaw
7.	Gearbox	21.	Filter
8.	Adjustable guide bracket right	22.	Cut off stop shaft
9.	Hydraulic cylinder	23.	Cut off stop
10.	Electrical box	24.	End of cut microswitch
11.	Blade guard	25.	Adjustable guide bracket left
12.	Vice hand-wheel	26.	Blade tensioning knob
13.	Wheel	27.	Blade tracking adjustment
14.	Coolant pump	28.	Coolant tap

CONTROL PANEL

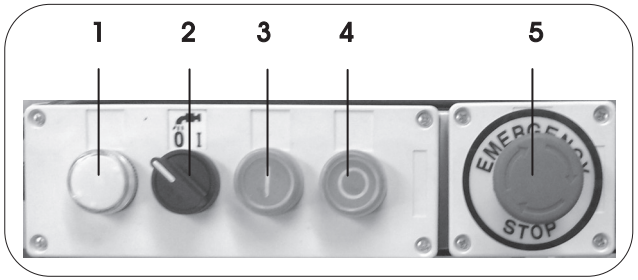

1.	Power on light	When lit the machine is ready for operation.
2.	Coolant pump switch	Turns the coolant pump on / off.
3.	Start button	Turns the machine on.
4.	Stop button	Turns the machine off.
5.	Emergency stop button	Interrupts power to the system and stops the motor, twist the button until it pops out to bring power back to the machine.

WIRING DIAGRAM

1 PHASE WIRING

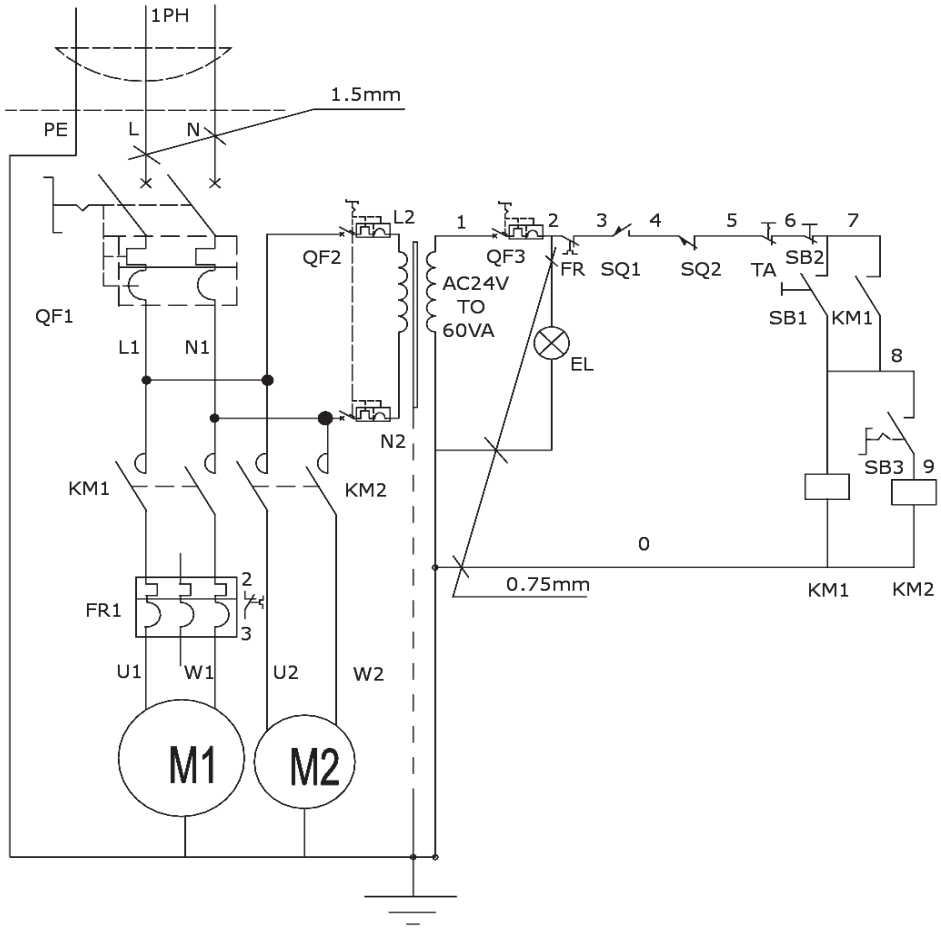

Description	Reference	Specification	Description	Reference	Specification
Main motor	M1	50hZ 1ph	Contactor	KM	CN6 AC24v 50Hz
Coolant pump	M2	230/400v 50Hz 40w	Heat relay	FR	RHM-5N 5.5-8.5A
Transformer	TC	AC400,230 24v	Limit switch	SQ1	QKS7 250V 10A
Current breaker	QF1	DZ47-63 3P 5A	Interlocking switch	SQ2	QKS8 250V 10A
Current breaker	QF2	DZ47-63 2P 2A	Start	SB	XB2-BE101
Current breaker	QF3	DZ47-63 1P 1A	Stop	SA1	XB2-BE102
Switch	TA	XB2-BX542	Start	SA2	XB2-ED21
Indicator light	EL	XB2-BVD3			

TROUBLESHOOTING

Symptom	Possible cause	Solution
Unusual wear on side or back of blade.	1. Blade guides are worn. 2. Blade guides not properly adjusted. 3. Blade guide brackets are loose.	1. Replace blade guides. 2. Adjust blade guides. 3. Tighten blade guide brackets.
Excessive blade breakage and teeth ripping from the blade.	1. Material is loose in the vice. 2. Incorrect speed or feed. 3. Blade is too coarse. 4. Incorrect blade tension. 5. Blade is in contact with material before bandsaw is started. 6. Blade is rubbing on the pulley flange. 7. Blade guides are misaligned. 8. Blade is too thick. 9. Bad weld on blade	1. Clamp the material securely. 2. Adjust speed or feed. 3. Use correct blade for material. 4. Adjust blade tension so that it does not slip on the pulley. 5. Place the blade in contact with the material only after the saw has started. 6. Adjust the blade tracking. 7. Adjust blade guide alignment. 8. Use correct thickness blade. 9. Re-weld or replace blade.
Motor overheating.	1. Blade tension too high. 2. Drive belt tension too high. 3. Blade too coarse or too fine. 4. Gears need lubrication. 5. Blade is binding in the cut.	1. Reduce blade tension. 2. Reduce belt tension. 3. Use a blade designed for the material. 4. Lubricate the gears. 5. Decrease feed and speed.
Blade is twisting.	1. Blade tension is too high. 2. Blade is binding in the cut.	1. Decrease blade tension. 2. Decrease feed pressure.
Bad, rough or crooked cuts.	1. Blade is too coarse. 2. Blade guide assembly is loose. 3. Blade guides are spaced out too far. 4. Incorrect speed. 5. Blade is blunt. 6. Inadequate blade tension. 7. Blade guide bearings not properly adjusted. 8. Feed pressure too much.	1. Use a finer blade. 2. Tighten the guide assembly. 3. Move guides closer to the material. 4. Adjust speed. 5. Replace the blade. 6. Increase blade tension a little at a time. 7. Adjust blade guide bearings. 8. Reduce feed pressure by increasing the spring tension on the arm.
Premature blade dulling.	1. Blade tpi is too high. 2. Incorrect speed - too fast. 3. Inadequate feed pressure. 4. Hard spots or scale on the material. 5. Blade installed backwards. 6. Insufficient blade tension. 7. Work hardened material especially stainless.	1. Replace with a lower tpi blade. 2. Reduce speed. 3. Increase feed pressure by unscrewing tension bar. This will decrease the spring tension on the arm. 4. Reduce speed, increase feed pressure. 5. Remove blade, twist inside out and reinstall. 6. Increase blade tension. 7. Increase feed pressure by reducing spring pressure.

ASSEMBLY INSTRUCTIONS

UNPACKING

1.Remove the bandsaw from the packaging, check the bandsaw for any signs of damage or missing items prior to assembling.

Note: If any items are missing or damaged, ***DO NOT*** use the machine, contact your distributor immediately.

2.Unbolt the bandsaw from the wooden base.
3.Put two pieces of sturdy wood on the floor, so that the bandsaw can be lowered onto it as a temporary measure.

Danger / Caution: At least 2 persons are required to remove this bandsaw from it`s packaging it is extremely heavy! Failing to follow this can have serious consequences and could lead to personal injury and/or the possibility of damage.

4.Use proper lifting equipment to move the bandsaw off the wooden base and onto the blocks of wood.

FITTING THE WHEELS

1.Slide one wheel (B) onto the axle (G), secure with a split pin (E).
2.Now push the axle through the pre-drilled holes at the corner of the stand.
3.Fit the other wheel onto the opposite end of the axle and secure with the split pin.
4.Repeat process for the opposite end.
5.Use the lifting equipment to raise the bandsaw slightly, so you can remove the wooden blocks.
6.Lower the bandsaw onto the ground, you are now ready to move the bandsaw into your desired location.

FITTING THE CUT OFF STOP

1.Slide the cut off stop shaft (F) through the cut off stop hole on the front of the casting, secure using the grub screw on top of the bed casting.
2.Slide the cut off stop (C) onto the shaft (F), secure using the thumb screw (D).
3.The cut off stop is now ready to be used.

CLEANING THE SURFACES PRIOR TO OPERATION

Before using the bandsaw it is best to clean the rust protected surfaces using kerosene (paraffin), diesel oil or mild solvent. Never use cellulose based solvents such as paint

thinner or lacquer thinner as these will damage the painted surfaces.

REMOVING THE TRANSIT BOLT

Before the bandsaw can be used the transit bolt and bracket must be removed; this is situated at the end of the saw bow and bed (see right picture). Once the bracket is removed refit the head stop bolt and adjust it's height so as to prevent excessive pressure on the end of cut microswitch.

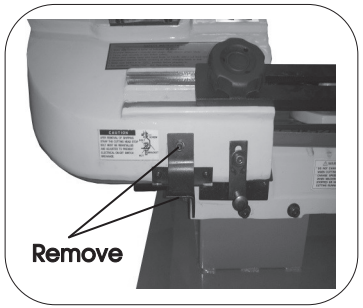

OPERATING INSTRUCTIONS

SETTING THE BLADE SPEED

1.Prior to changing the blade speed ensure the mains lead is disconnected.
2.Unscrew and remove belt guard screw and lift up the cover, this will allow access to the belt so it can be adjusted.

3.Loosen the motor plate lock bolt (Fig.1, A).
4.Loosen the motor slide bolts (Fig.1,B), you should now be able to push the motor inwards to slacken the belt off.

5.Move the belt to the desired speed (Fig.2).

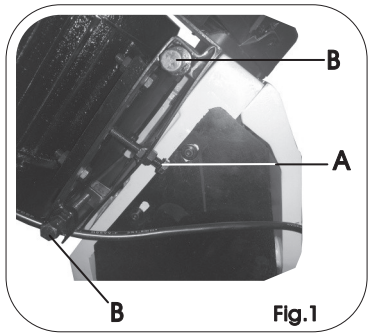

Fig.1

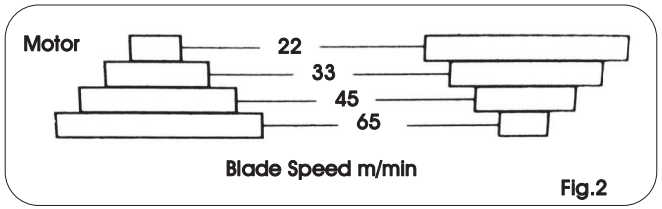

Fig.2

6.Once the belt has been set to the desired speed, re-tension the belt by tightening bolts.
7.Close the belt guard and secure with the screw.

On page 15 is a table which will give you some idea of what speed materials should be cut at.

Note: The outer bearing shaft is eccentric and is the one to adjust, the inner bearing shaft is fixed and can not be adjusted.

Note: Never attempt to adjust the blade guide bearings whilst the machine is running, ***ALWAYS*** disconnect from the mains supply before proceeding.

1.Raise the saw bow to the vertical position and lock it by turning the hydraulic cylinder tap to the off position.
2.Remove the two screws holding the bearing guard plate onto the lower eccentric shaft.
3.Loosen the nut (Fig.4,A) holding the eccentric shaft in position.
4.With a spanner turn the eccentric shaft (Fig.4,B) until there is a gap of about 0.001", you should just be able to slide a piece of paper between the gap.

5.Once the eccentric shaft has been adjusted, retighten the nut (A) and screw the plate back on.
6.Repeat steps 3-5 for the upper eccentric shaft.

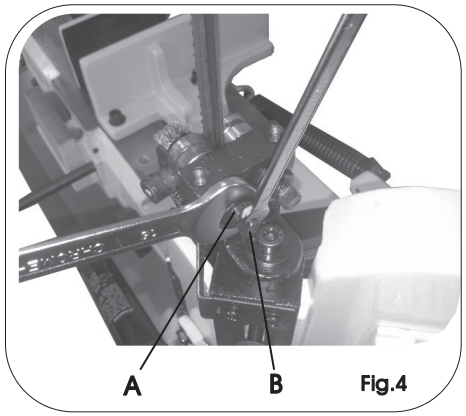

Fig.4

GENERAL MAINTENANCE

- Do not used compressed air to clean the bandsaw, this can cause metal fillings to go into the guide bearings and other parts of the bandsaw.
- Always remove the metal fillings from the blade guides after use.
- Wipe the bandsaw down with a dry cloth.
- Check the guide bearings regularly making sure they are clean and correctly adjusted.
- Always check to make sure the wire brush properly adjusted and cleaned.
- Always disconnect from the mains supply before carrying out any maintenance.

SETTING THE BLADE SQUARE TO THE BED AT 90°

1.Ensure the bow is at its lowest position.
2.Disconnect from the mains supply.
3.Place an engineer`s set square onto the bed and touching the blade (Fig.12).
4.If any adjustment is needed then loosen the two cap head bolts (Fig.12,A).
5.Rotate both blade guides in the required direction until the blade makes contact with the set square along the entire width of the blade.
6.Once set correctly, re-tighten both cap head bolts.
7.The blade guide bearings may need to adjusted.

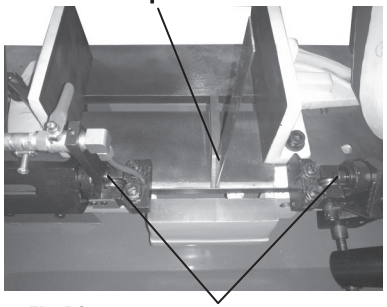

Fig.12

ADJUSTING THE BOW WEIGHT

The bow weight is one of the most important adjustments on the saw. If the bow weight is set incorrectly then expect poor performance, crooked cuts, teeth stripping from the blade, stalling and the blade coming off the blade pulleys. The hydraulic cylinder feed rate will not compensate for improper bow weight. A new machine will have the bow weight pre-set, if you need to adjust the bow weight then follow the steps below.

1.Disconnect the mains from the supply.
2.Ensure the bow is at its lowest position.
3.Turn the hydraulic cylinder knob anti-clockwise until it stops.
4.Place a scale on the Blade tensioning knob, lift the saw bow up, the scale should read between 5-6kgs.
5.If it doesn't then adjust the tension nut (Fig.7,A) until it reaches between 5-6kgs.

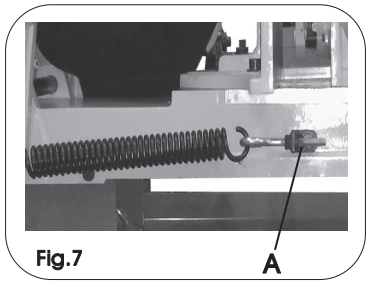

Fig.7

BLADE GUIDE BEARING ADJUSTMENT

Note: The correct guide bearing adjustment is very important, this will make the blade run smoother and evenly without any snagging or twisting whilst the blade is running. It will also prolong the blade life.

Material	Speed M/Min (FPM)	Material	Speed M/Min (FPM)	Material	Speed M/Min (FPM)	Material	Speed M/Min (FPM)
Carbon steel	60 - 108 (196 - 354)	**Tool steel**	62 (203)	**Alloy steel**	34 - 98 (111 - 321)	**Free machining stainless steel**	46 - 62 (150 - 203)
Steel section	54 - 67 (180 - 220)	**High speed tool steel**	23 - 36 (75 - 118)	**Mold steel**	75 (246)	**Gray cast iron**	33 - 75 (108 - 255)
Thin tube	54 - 67 (180 - 220)	**Cold work tool steel**	95 - 213 (29 - 65)	**Water hard tool steel**	242 (74)	**Ductile austenitic cast iron**	65 - 85 (20 - 26)
Aluminium alloy	67 - 163 (220 - 534)	**Hot work tool steel**	62 (203)	**Stainless steel**	26 (85)	**Malleable cast iron**	98 (321)
Copper alloy	70 - 147 (229 - 482)	**Oil hardening tool steel**	62 - 65 (203 - 213	**Cold rolled stainless Steel**	26 - 62 (85 - 203)		

Note: The above table is an approximate guide reference only, various factors mean some materials may require different speeds to the ones quoted.

OPERATING THE VICE

Setting The Vice to 90°:

1. Remove the fixed vice jaw by loosening and removing the two cap head bolts (Fig.13,A).
2. Place the fixed vice jaw over the right hand bolt holes (Fig.14,B).
3. Screw the cap head bolts down but do not tighten them just yet, adjust the jaw to 90° on the scale (located on the rear of the bed), once adjusted tighten the cap head bolts fully.

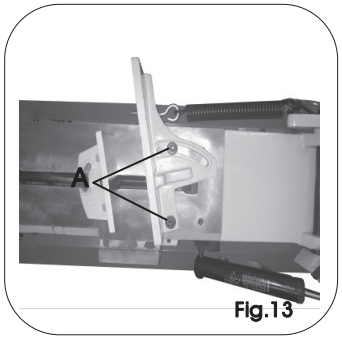

Fig.13

Fig.14

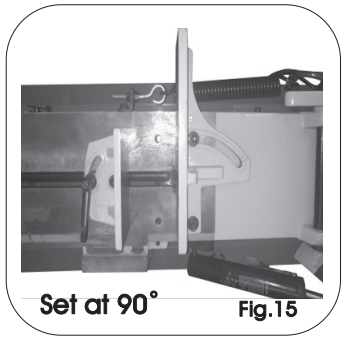
Set at 90°
Fig.15

Setting the vice to an angle other than 90°:

1. Remove the fixed vice jaw by loosening and removing the two cap head bolts (Fig.13,A).
2. Place the fixed vice jaw over the left hand bolt holes (Fig.16,C).
3. Screw the cap head bolts down but do not tighten them just yet, adjust the fixed vice jaw to the required angle on the scale, once adjusted re-tighten the cap head bolts.

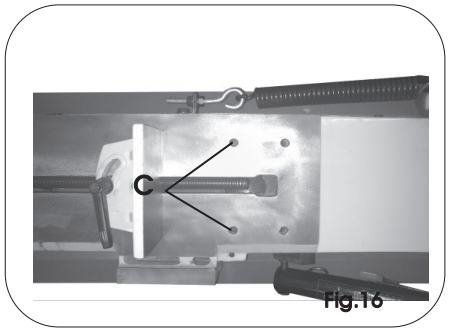

Fig.16

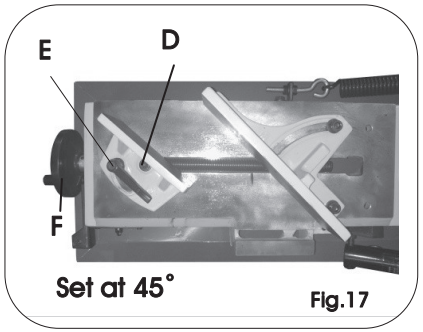

Set at 45°
Fig.17

Blade tension is important for the correct operation of the bandsaw; the blade tension should be set between 700-900kgs.

To set the blade correctly without using a blade tension gauge, take the following steps.

1.Disconnect the bandsaw from the mains supply.
2.Open the blade guard by sliding up and removing the removable cover (Fig.8)
3.Remove the two thumbscrews screws on the blade guard (Fig.9 & Fig.10).
4.Tension the blade slightly to take any slack off the blade.
5.Turn the Blade tensioning knob in a clockwise direction, one and a half turns or two full turns, this will equal approximately 800kgs of blade tension.
6.Close the blade guard etc. and connect to the mains supply.
7.Run the bandsaw between 2-3 minutes so the blade can seat correctly.
8.Stop the bandsaw and disconnect from the mains supply.
9.Open the blade guard and loosen the blade until it just begins to slacken.
10.Tighten the blade so it becomes straight between the blade pulleys, and all the slackness has gone.
11.Turn the Blade tensioning knob approximately two full turns, this should now be tensioned correctly.

Fig.8

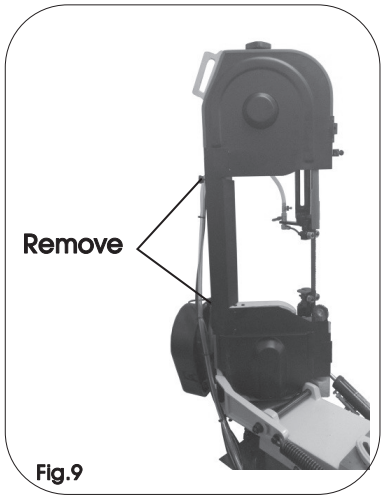

Fig.9

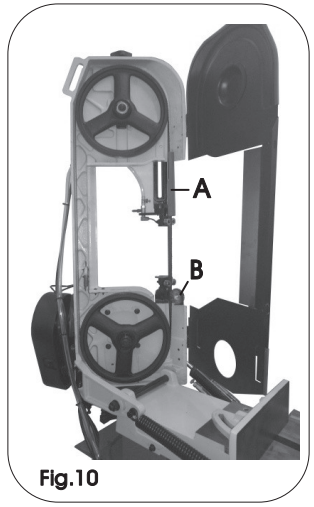

Fig.10

MAINTENANCE INSTRUCTIONS

CHANGING THE BLADE

Caution: Before carrying out any maintenance always disconnect the bandsaw from the mains supply.

Caution: We strongly advise wearing gloves for protection when changing blades, blades are sharp and dangerous and can cause personal injury.

Note: The bandsaw was designed to use a 2362 x 0.9 x 19mm size blade, always use this size blade.

1.Disconnect from the mains supply.
2.Raise the saw bow into a vertical position.
3.Open the blade guard by sliding up and removing the removable cover (Fig.8 page 21).
4.Remove the two thumbscrews on the blade guard (Fig.9 page 21) (Fig.10 page 21).
5.Take the tension off the blade by turning the Blade tensioning knob anti-clockwise.
6.Remove the wire brush and the upper blade guard (Fig.10, page 21 A & B).
7.Ease the blade from the lower pulley first and then from the top pulley, carefully remove it from the blade guide bearings.
8.Fit the new blade through the blade guide bearings first, then ease it onto the lower pulley then onto the top pulley.
9.Use both hands to work the blade onto both pulleys.
10.Put a small amount of tension on the blade (see tensioning the blade).
11.Once done reattach the blade guards etc.
12.The blade will need to be fully tensioned see below on how to do this.

TENSIONING THE BLADE

Caution: ***DO NOT*** over tension the blade as this will warp and stretch the blade.

Danger / Caution: Blades are sharp use extra care when removing, installing or handling.

OPERATING INSTRUCTIONS….cont

Using the vice:

1. Select the desired angle you wish to cut at and adjust the vice accordingly.
2. Ensure the bolts (Fig.13,A) are tight.
3. loosen the movable vice jaw cap head bolt (Fig.17,D) and lever lock (Fig.17,E).
4. Place the material to be cut between the two vices and slide the moveable vice up against the material.
5. Fully tighten the cap head bolt and lever lock.
6. Use the vice hand-wheel (Fig.17,F) to secure the movable vice jaw tight against the material.
7. The material is now secure and ready to be cut.

USING THE COOLANT PUMP

Note: We recommend the use of water soluble coolant, this will prolong the blade life and make the cut more efficient.

1.Slide the coolant tank out from the rear of the bandsaw (Fig.3).
2.Make sure the filter is fitted and fill with fresh coolant.
3.Slide the coolant tank back onto the bandsaw panel, making sure that the coolant hose is situated over the filter.
4.Open the coolant tap (Page 11, ref. 28).
5.Turn the coolant switch on the control panel to on (I).
6.The coolant will start to pump once the start button is pressed and the saw starts to run.

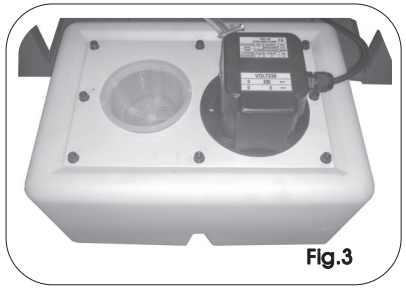
Fig.3

ADJUSTING THE BLADE GUIDES

1.Disconnect from the mains supply.
2.Loosen the knob (Fig.5,A), so that the left adjustable guide bracket (Fig.5,B) can be moved closer to your material.
3.Loosen the bolt (Fig.5,D) and slide the right adjustable guide bracket (Fig.5,C) closer to your material.
4.Once adjusted re-tighten the knob (A) and bolt (D).

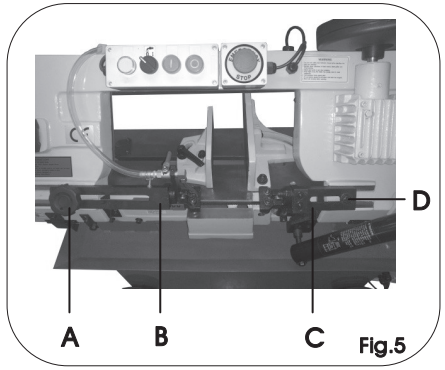

Fig.5

HYDRAULIC CYLINDER ADJUSTMENT

The hydraulic cylinder has an adjustable rate of descent; it can be adjusted by turning the knob (Fig.6, A) clockwise to slow down the rate, or anti-clockwise to speed up the rate of decent. The bow can be stopped in any position by turning the tap (Fig.6, B). When the tap is at 90° to the cylinder the flow will stop and the bow will stop descending.

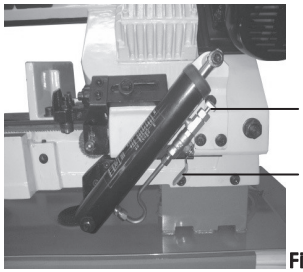

Fig.6

CUTTING WITH THE BANDSAW

Danger: Before attempting to cut always make sure all covers are on and secure.

Note: The harder the material to be cut the slower the speed should be.

1.Disconnect the bandsaw from the mains supply.
2.Change the blade speed to suit the material that is to be cut (see page 14 changing the blade speed).
3.Raise the saw bow to a vertical position.
4.Adjust the cut length stop to your desired position (if required).
5.Set the vice angle to your desired position.
6.Open the vice and insert the material to be cut then close the vice to secure.
7.Move the two adjustable blade guides closer to the material, but make sure they doesn't foul against it or the saw.
8.Adjust the rate of descent of the arm as described on page 17 so that it is creeping slowly down towards the material, shut off the hydraulic cylinder when the blade gets close to the material; do not start cutting on a sharp edge file it off first.

Caution: Do not turn the machine on until the material is secured and the blade has been lowered just above the material.

9.Plug in to the mains supply and turn the coolant pump on.
10.Start the saw.
11.To bring the blade in to contact with the material to be cut, open the tap on the hydraulic cylinder, if the blade jams then immediately turn the bandsaw off and refer to the troubleshooting guide on page 24.
12.Once the cut is complete, the saw should automatically stop.

Caution: Never remove the material when the bandsaw is still running, always switch the machine off before attempting to remove the material, failure to do this could lead to serious personal injury.

Caution: Never start the bandsaw with the blade in contact with the workpiece. Allow the saw to reach full speed before commencing cut.