Please dispose of packaging for the product in a responsible manner. It is suitable for recycling. Help to protect the environment, take the packaging to the local amenity tip and place into the appropriate recycling bin.

Never dispose of electrical equipment or batteries in with your domestic waste. If your supplier offers a disposal facility please use it or alternatively use a recognised re-cycling agent. This will allow the recycling of raw materials and help protect the environment.

FOR HELP OR ADVICE ON THIS PRODUCT PLEASE CONTACT YOUR DISTRIBUTOR, OR SIP DIRECTLY ON:
TEL: 01509500400
EMAIL: sales@sip-group.com or technical@sip-group.com
www.sip-group.com

Ref: 09MAY2023 Revision 3

SIP INDUSTRIAL

machinery specialists since 1968

18" Metal Cutting Bandsaw

01597

Please read and fully understand the instructions in this manual before operation. Keep this manual safe for future reference.

Declaration of Conformity

We

SIP (Machinery Europe) Ltd
ASM Chartered Accountants
First Floor Block One
Quayside Business Park
Dundalk
County Louth
Republic of Ireland

As the manufacturer's authorised representative within the EC
declare that the

18” Metal Cutting Bandsaw 3ph - SIP Pt. No. 01597

Conforms to the requirements of the following directive(s), as indicated.

2006/42/EC	Machinery Directive
2006/95/EC	Low Voltage Directive
2004/108/EC	EMC Directive
2011/65/EU & (EU)2015/863	RoHS Directive

And the relevant harmonised standard(s), including

EN IEC 55014-1:2021
EN IEC 55014-2:2021
EN IEC 61000-3-2:2019+A1
EN IEC 61000-3-3:2013+A1+A2

Signed: ……...

Mr P. Ippaso - Managing Director - SIP (Industrial Products) Ltd
Date: 09/05/2023.

Declaration of Conformity

We

SIP (Industrial Products) Ltd
Gelders Hall Road
Shepshed
Loughborough
Leicestershire
LE12 9NH
England

As the manufacturer within the UK, England, Scotland & Wales, declare that the

18" Metal Cutting Bandsaw 3ph - SIP Code 01597

Conforms to the requirements of the following directive(s), as indicated.

Supply of Machinery (Safety) Regulations 2008
Electrical Equipment (Safety) Regulations 2016
Electromagnetic Compatibility Regulations 2016
The Restriction of the Use of Certain Hazardous Substances in Electrical and Electronic Equipment Regulations 2012

And the relevant harmonised standard(s), including

BS EN IEC 55014-1:2021
BS EN IEC 55014-2:2021
BS EN IEC 61000-3-2:2019+A1
BS EN IEC 61000-3-3:2013+A1+A2

Signed: .....

Mr P. Ippaso - Director - SIP (Industrial Products) Ltd Date: 09/05/2023

UK CA

Page No.	Description
4.	Safety Symbols Used Throughout This Manual
4.	Safety Instructions
8.	Electrical Connection
9.	Guarantee
10.	Technical Specifications
10.	Contents & Accessories
11.	Getting to Know Your Bandsaw
13.	Assembly Instructions
14.	Operating Instructions
20.	Maintenance Instructions
25.	Troubleshooting
26.	Exploded Diagram - Left Side Of The Bow
27.	Exploded Drawing - Right Side Of The Bow
28.	Exploded Drawing - Base
29.	Parts List
34.	UK Declaration of Conformity
35.	EU Declaration of Conformity

SAFETY SYMBOLS USED THROUGHOUT THIS MANUAL

Danger / Caution: Indicates risk of personal injury and/or the possibility of damage.

Warning: Risk of electrical injury or damage!

Note: Supplementary information.

SAFETY INSTRUCTIONS

IMPORTANT: Please read the following instructions carefully, ***failure to do so could lead to serious personal injury and / or damage to the bandsaw.***

When using your bandsaw, basic safety precautions should always be followed to reduce the risk of personal injury and / or damage to the bandsaw.
Read all of these instructions before operating the bandsaw and save this user manual for future reference.
The bandsaw should ***not*** be modified or used for any application other than that for which it was designed.
Do not use this bandsaw for anything other than its intended purpose; this bandsaw is designed for metal cutting work in engineering workshops, garages, metal fabricators, etc.
If you are unsure of its relative applications do not hesitate to contact us and we will be more than happy to advise you.
Before operating the bandsaw always check no parts are broken, and that no parts are missing.
Always operate the bandsaw safely and correctly.
KNOW YOUR BANDSAW: Read and understand the owner's manual and labels affixed to the bandsaw. Learn its applications and limitations, as well as the potential hazards specific to it.
KEEP CHILDREN AND UNTRAINED PERSONNEL AWAY FROM THE WORK AREA: All visitors should be kept at a safe distance from the work area; never allow untrained persons to operate the bandsaw.
STAY ALERT: Always watch what you are doing and use common sense.
NEVER LEAVE THE BANDSAW UNATTENDED: When in use, or connected to the mains

PARTS LIST….cont

Ref. No.	Description	SIP Part No.	Ref. No.	Description	SIP Part No.
213.	Hose	WK04-00314	N/A	Contactor CN6	WK04-00150
214.	Coolant tank	WK04-00020	N/A	Thermal relay 2.4-3.6A	WK04-00152
N/A	QF1 Breaker	WK04-00147	N/A	Transformer	WK04-00153
N/A	QF2 Breaker	WK04-00148	N/A	Blade guard microswitch	WK04-00154
N/A	QF3 Breaker	WK04-00149			

Ref. No.	Description	SIP Part No.	Ref. No.	Description	SIP Part No.
159.	Washer M10	WK04-00046	187.	Bolt M6x12	WK04-00038
160.	Fixed vice jaw	WK04-00279	188.	Washer M6	WK04-00011
161.	Bolt M12x70	WK04-00280	189.	Shaft	WK04-00300
162.	Nut M12	WK04-00173	190.	Switch	WK04-00301
163.	Bolt M12x35	WK04-00282	191.	Nut M8	WK04-00015
164.	Washer M12	WK04-00049	192.	Bolt M8x30	WK04-00018
165.	Bushing	WK04-00283	193.	Panel	WK04-00302
166.	Movable vice jaw	WK04-00284	194.	Bolt M5x15	WK04-00303
167.	Bolt M10x30	WK04-00285	195.	End cover	WK04-00304
168.	Press plate	WK04-00286	196.	Connecting beam	WK04-00305
169.	Pivot arm	WK04-00287	196.1.	Protector	WK04-00306
170.	Bolt M8x25	WK04-00137	197.	Protect cover	WK04-00307
171.	Washer M8	WK04-00014	198.	Washer M8	WK04-00014
172.	Cover plate	WK04-00288	199.	Bolt M8x20	WK04-00068
173.	Nut M24x1.5	WK04-00289	200.	Bolt M4x16	WK04-00308
174.	Washer	WK04-00290	200.1.	Mains lead	WK04-00309
175.	Position set bracket	WK04-00291	201.	Control box	WK04-00310
176.	Nut M10	WK04-00052	202.	Stand	WK04-00311
177.	Screw	WK04-00292	203.	Bolt M8x30	WK04-00018
178.	Bolt M10x35	WK04-00045	204.	Washer M8	WK04-00014
179.	Shaft	WK04-00293	205.	Nut M8	WK04-00015
180.	Bearing	WK04-00294	206.	Bolt M8x30	WK04-00018
181.	Washer	WK04-00295	207.	Washer M8	WK04-00014
182.	Bracket	WK04-00296	208.	Nut M8	WK04-00015
183.	Bolt M8x40	WK04-00132	209.	Cover	WK04-00312
184.	Cut off stop shaft	WK04-00297	210.	Washer M6	WK04-00011
185.	Cut off stop	WK04-00298	211.	Bolt M6x20	WK04-00016
186.	Ring	WK04-00299	212.	Coolant pump 3ph	WK04-00313

supply.

KEEP WORK AREA CLEAN AND WELL LIT: Cluttered work areas and dark areas invite accidents. Floors must not be slippery due to oil, water or sawdust etc.

HAVE YOUR BANDSAW REPAIRED BY A QUALIFIED PERSON: The bandsaw is in accordance with the relevant safety requirements. Repairs should only be carried out by qualified persons using original spare parts, otherwise this may result in considerable danger to the user and void the warranty.

DANGER! Check that the bandsaw is in sound condition and good working order before each use; Take immediate action to repair or replace faulty / damaged parts.

WARNING! Only operate on a level and stable surface.

WARNING! RISK OF ELECTRIC SHOCK. Do not expose the bandsaw to water spray, rain, dripping water or moisture of any kind.

PROTECT YOURSELF FROM ELECTRIC SHOCK: When working with machinery, avoid contact with any earthed items (e.g. pipes, radiators, hobs and refrigerators, etc.). It is advisable wherever possible to use an RCD (residual current device) at the supply socket.

DO NOT ABUSE THE MAINS LEAD: Never pull the mains lead to remove the plug from the mains socket, or to move the bandsaw from place to place. Keep the mains lead away from heat, oil and sharp edges. If the mains lead is damaged, it must be replaced by the manufacturer or its service agent or a similarly qualified person in order to avoid unwanted hazards.

ALWAYS check that the belt guard and blade guards are in place, adjusted correctly, undamaged and firmly attached.

NEVER STAND ON THE BANDSAW: The bandsaw is not designed for this purpose.

DO NOT dismantle, tamper with or modify the bandsaw, as this may be dangerous and will invalidate the warranty.

SECURE THE WORK-PIECE: Use the vice to hold the work-piece; this frees up both hands to operate the saw.

REMOVE ADJUSTING KEYS AND WRENCHES: Form a habit of checking to see that keys and adjusting tools are removed from the bandsaw before every use.

- If a problem with the bandsaw is experienced or suspected stop using the bandsaw ***immediately*** and contact your distributor for repair.
- Regularly inspect the bandsaw, ensuring that it is in good working order and condition.
- Always ensure that the work area is clean, tidy and free from unrelated materials.
- Keep away from flammable objects, materials & surfaces, use in a location where accidental contact (particularly by children) is unlikely.
- Ensure on/off switches are switched to off (0) before connecting mains lead to the power supply.
- Keep the work area clean and clear of possible tripping hazards.
- Keep children and unauthorised persons away from the bandsaw, as it has a sharp blade!
- Disconnect from the mains before moving or attempting any cleaning or mainte-

nance.

- Keep hands and all other body parts away from the blade.
- Failure to follow the warnings in this manual, may result in personal injury and/or property damage.
- Turn the bandsaw off and disconnect it from the mains supply when moving from one location to another.
- Never operate the bandsaw without all guards in place.
- ***DO NOT*** get the bandsaw wet or use in damp or wet locations or areas where there is condensation.
- ***DO NOT*** move the bandsaw whilst in operation.
- ***DO NOT*** remove the blade guard or belt guard whilst the bandsaw is switched on.
- ***DO NOT*** allow unqualified persons to disassemble the bandsaw for any reason, the bandsaw must be checked by qualified personnel only.
- ***DO NOT*** use the bandsaw without the blade guard and belt guard closed, as this will lead to personal injury to you or others!
- ***WARNING*** if a fuse blows, ensure it is replaced with the correct fuse type and rating.
- ***DO NOT*** place any objects on the safety guard or on the covers at any time.
- When not in use, store the bandsaw carefully in a safe, dry, childproof location.
- ***NEVER*** cover the bandsaw during operation or whilst it cools after operation.
- Be aware of moving parts that occur during normal operation of this bandsaw.
- ***NEVER*** operate the bandsaw with damaged, broken or missing parts, or with any guards or covers removed.
- ***DO NOT*** operate the bandsaw or any electrical items with wet hands.
- Keep the floor around the machine clean and free of scrap material, oil and grease.
- ***ALWAYS*** keep the machine guards in place at all times when the machine is in operation, if removed for maintenance then use extreme caution, always refit the guards immediately after any maintenance.
- ***DO NOT*** over reach, always maintain a balanced stance so that you do not fall or lean into any moving parts.
- Keep all visitors at a safe distance.
- ***ALWAYS*** keep hands and fingers away from the blade when in operation.
- ***ALWAYS*** use the vice to secure your material, never cut any material without using the vice; this is extremely dangerous!
- ***ALWAYS*** have the belt guard closed at all times when the machine is in operation, failure to do this can lead to personal injury.
- ***ALWAYS*** use adequate roller stands for supporting longer and heavier materials.
- ***ALWAYS*** use the correct blade, using the correct tpi blade for cutting the material will make your job easier, and the blade last longer, using the wrong tpi blade will make a rough cut and will decrease the life of the blade.
- ***NEVER*** force the blade through the material, this will decrease the life of the blade.
- ***ALWAYS*** keep the bandsaw as clean as possible and keep blades sharp for best

Ref. No.	Description	SIP Part No.	Ref. No.	Description	SIP Part No.
112.	Seal	WK04-00244	139.1.	Connecting plate	WK04-00263
113.	Cover	WK04-00245	139.2.	Nut M8	WK04-00015
114.	Bolt M8x20	WK04-00068	139.3.	Bolt M8x20	WK04-00068
115.	Motor	WK04-00246	139.4.	Washer M8	WK04-00014
116.	Ring	WK04-00247	140.	Retainer	WK04-00264
117.	Pivot shaft	WK04-00248	141.	Base	WK04-00265
118.	Motor plate	WK04-00249	141.1.	Scale	WK04-00266
119.	Bolt M8x45	WK04-00205	142.	Pin	WK04-00267
120.	Nut M8	WK04-00015	143.	Hyd. cylinder upper bracket	WK04-00268
121.	Washer M8	WK04-00014	144.	Washer M8	WK04-00014
122.	Inner pulley cover	WK04-00250	145.	Bolt M8x30	WK04-00018
123.	Bolt M8x20	WK04-00068	146.	Hydraulic cylinder	WK04-00269
124.	Motor pulley	WK04-00251	147.	Bolt M8x16	WK04-00013
125.	Belt pulley	WK04-00252	148.	Washer M8	WK04-00014
126.	Key	WK04-00253	149.	Pivot shaft	WK04-00270
127.	Washer M8	WK04-00014	150.	Spring bracket	WK04-00271
128.	Bolt M8x20	WK04-00068	151.	Nut M12	WK04-00173
129.	Belt	WK04-00254	152.	Bolt M8x30	WK04-00018
130.	Outer pulley cover	WK04-00255	153.	Washer M8	WK04-00014
131.	Vice handwheel	WK04-00256	154.	Eye bolt	WK04-00273
132.	Key	WK04-00257	155.	Spring	WK04-00274
133.	Bolt M6x8	WK04-00258	155.1.	Spring cover	WK04-00275
134.	Washer M6	WK04-00011	155.2.	Bolt M8x20	WK04-00068
135.	Acme screw	WK04-00259	155.3.	Washer M8	WK04-00014
136.	Bracket	WK04-00260	155.4.	Nut M8	WK04-00015
137.	Bolt M5x8	WK04-00035	156.	Lever lock	WK04-00276
138.	Acme nut	WK04-00261	157.	Washer	WK04-00277
139.	Pin	WK04-00262	158.	Bolt M10x30	WK04-00278

Ref. No.	Description	SIP Part No.	Ref. No.	Description	SIP Part No.
57.	Press plate	WK04-00199	84.	Right wheel cover	WK04-00220
58.	Washer M6	WK04-00011	85.	Bolt M6x12	WK04-00038
59.	Bolt M6x20	WK04-00016	86.	Cover	WK04-00221
60.	Clamp guide	WK04-00200	87.	Bolt M5x12	WK04-00093
61.	Fixed bearing shaft	WK04-00201	88.	Shaft cover	WK04-00222
62.	Eccentric bearing shaft	WK04-00202	89.	O-ring	WK04-00223
63.	Bearing 608ZZ	WK04-00090	90.	Seal	WK04-00224
64.	Bearing 608ZZ	WK04-00090	91.	Bolt M8x20	WK04-00068
65.	Ring	WK04-00203	92.	Shaft end cap	WK04-00225
66.	Fixed arm	WK04-00204	93.	O-ring	WK04-00226
67.	Bolt M8x45	WK04-00205	94.	Shaft	WK04-00227
68.	Hex head screw	WK04-00206	95.	Key 10x50	WK04-00228
69.	Washer	WK04-00207	96.	Nylon pad	WK04-00229
70.	Seat	WK04-00208	97.	Bearing	WK04-00230
71.	Nut M12	WK04-00173	98.	Ring	WK04-00231
72.	Pressure spring	WK04-00210	99.	Worm wheel	WK04-00232
73.	Brush shaft	WK04-00211	100.	Bearing	WK04-00233
74.	Steel brush	WK04-00212	101.	Gearbox casting	WK04-00234
75.	Spacer sleeve	WK04-00213	102.	Bolt M6x12	WK04-00038
76.	Bolt M6x8	WK04-00214	103.	Gearbox cover	WK04-00235
77.	Front support	WK04-00215	104.	Gasket	WK04-00236
78.	Bolt M12x20	WK04-00216	105.	Oil sight glass	WK04-00237
79.	Drive wheel	WK04-00217	106.	Oil plug	WK04-00238
80.	Drive wheel key	WK04-00218	107.	O-ring	WK04-00239
81.	Blade 3280 x 19 x 0.80mm	01415	108.	Bearing	WK04-00240
81.	Blade 3280 x 19 x 0.90mm M42	01419	109.	Worm shaft	WK04-00241
82.	Bolt M10x20	WK04-00051	110.	Bearing	WK04-00242
83.	Drive wheel casting	WK04-00219	111.	Ring	WK04-00243

and safest performance.

- ***ALWAYS*** wear approved eye and ear protection when operating the machine.
- If any dust is produced, wear an approved face or dust mask.
- ***WARNING!*** round bar and tubing have a tendency to roll whilst being cut and can cause the blade to slip, ***DO NOT*** cut such items without clamping or blocking the material.
- ***DO NOT*** start the bandsaw until the material is secure and the blade has been lowered to just above the material.
- ***NEVER*** use damaged or deformed bandsaw blades.
- ***ALWAYS*** secure the material that is too be cut in the vice.
- ***NEVER*** use the bandsaw with the blade guard or pulley cover removed.
- ***DO NOT*** use whilst under the influence of drugs, alcohol or other intoxicating medication.
- ***NEVER*** start the bandsaw with the blade in contact with the workpiece.
- ***ALWAYS*** allow the bandsaw to reach full speed before commencing the cutting operation.
- ***NEVER*** use this bandsaw for any application other than that specified by the manufacturer.
- ***NEVER*** operate this bandsaw under conditions not approved by the manufacturer.
- Before using or servicing your bandsaw, read and understand all instructions. Failure to follow safety precautions or instructions can cause equipment damage and/or serious personal injury.
- ***WEAR THE CORRECT CLOTHING.*** Do not wear loose clothing, neckties, rings, bracelets, or other jewellery, which may get caught in moving parts. Non-slip footwear is recommended. Wear protective hair covering to contain long hair. Roll long sleeves up above the elbow.
- Understand the operating environment; Before each use the operator should assess, understand and where possible reduce the specific risks and dangers associated with the operating environment. Bystanders should also be made aware of any risks associated with the operating environment.

  If the bandsaw is used in a place of work all rules and laws etc. relating to the use of portable electrical appliances should be followed.

When using the saw, particularly during extended periods; ensure the operator as well as those in the area wear ear protection.

When using the saw always ensure the operator as well as those in the area wear eye protection.

Some materials have the potential to be highly toxic; always wear a face mask when operating the saw.

SAFETY INSTRUCTIONS….cont

CAUTION: The warnings and cautions mentioned in this user manual can not cover all possible conditions and situations that may occur. It must be understood by the operator that common sense and caution are factors which cannot be built into this product, but must be applied.

ELECTRICAL CONNECTION

WARNING! It is the responsibility of the owner and the operator to read, understand and comply with the following:

You must check all electrical products, before use, to ensure that they are safe.
You must inspect power cables, plugs, sockets and any other connectors for wear or damage.
You must ensure that the risk of electric shock is minimised by the installation of appropriate safety devices; A residual current circuit Breaker (RCCB) should be incorporated in the main distribution board. We also recommend that a residual current device (RCD) is used. It is particularly important to use an RCD with portable products that are plugged into a supply which is not protected by an RCCB. If in any doubt consult a qualified electrician.

Connecting to the power supply:

This SIP bandsaw requires 400v 50hz supply. Before each use, inspect the mains lead and plug (where applicable) to ensure that neither are damaged. If any damage is visible have the bandsaw inspected / repaired by a suitably qualified person. If it is necessary to replace the plug a heavy duty impact resistant plug would be preferable.

The wires for the plug are coloured in the following way:

Yellow / green	Earth
Blue/Grey	Phase
Brown	Phase
Black	Phase

Always secure the wires in the plug terminal carefully and tightly. Secure the cable in the cord grip carefully.

PARTS LIST

Ref. No.	Description	SIP Part No.	Ref. No.	Description	SIP Part No.
1.	Handwheel	WK04-00155	30.	Idle wheel	WK04-00181
2.	Bolt M6x8	WK04-00156	31.	Bolt M10x20	WK04-00051
3.	Key 5x15	WK04-00157	32.	Left wheel cover	WK04-00182
4.	Lead screw	WK04-00158	33.	Handle	WK04-00183
5.	Slide base	WK04-00159	34.	Bolt M6x12	WK04-00038
6.	Bolt M10x25	WK04-00107	36.	Spring pin 5x25	WK04-00184
7.	Washer M10	WK04-00046	37.	Washer M10	WK04-00046
8.	Guide plate	WK04-00160	37.1.	Bolt M10x30	WK04-00185
9.	Threaded ring	WK04-00161	38.	Rear support	WK04-00186
10.	Belleville spring	WK04-00162	39.	Slide	WK04-00187
11.	Ring	WK04-00163	40.	Bolt M8x20	WK04-00068
12.	Bearing	WK04-00164	41.	Nut M12	WK04-00173
13.	Slide stand	WK04-00165	42.	Bolt M12x40	WK04-00048
14.	Washer	WK04-00166	43.	Bolt M12x30	WK04-00189
15.	Bolt M12x20	WK04-00167	44.	Scale	WK04-00190
16.	Pressure spring	WK04-00168	44.1.	Rivet 2x5	WK04-00191
17.	Bracket	WK04-00169	45.	Bolt M6x12	WK04-00038
18.	Bolt M10x65	WK04-00170	46.	Washer M6	WK04-00011
19.	Screw	WK04-00171	47.	Guard	WK04-00192
20.	Washer	WK04-00172	48.	Press plate	WK04-00193
21.	Nut M12	WK04-00173	49.	P clip	WK04-00194
22.	Shaft	WK04-00174	50.	Guide arm	WK04-00195
24.	Spring washer	WK04-00175	51.	Bolt M8x20	WK04-00068
25.	Idle wheel casting	WK04-00176	52.	Nut M8	WK04-00015
26.	Bushing	WK04-00177	53.	Washer M8	WK04-00014
27.	C-ring	WK04-00178	54.	Adjustable knob	WK04-00196
28.	Bearing	WK04-00179	55.	Seat	WK04-00197
29.	Spacer	WK04-00180	56.	Middle plate	WK04-00198

EXPLODED DRAWING….cont

BASE

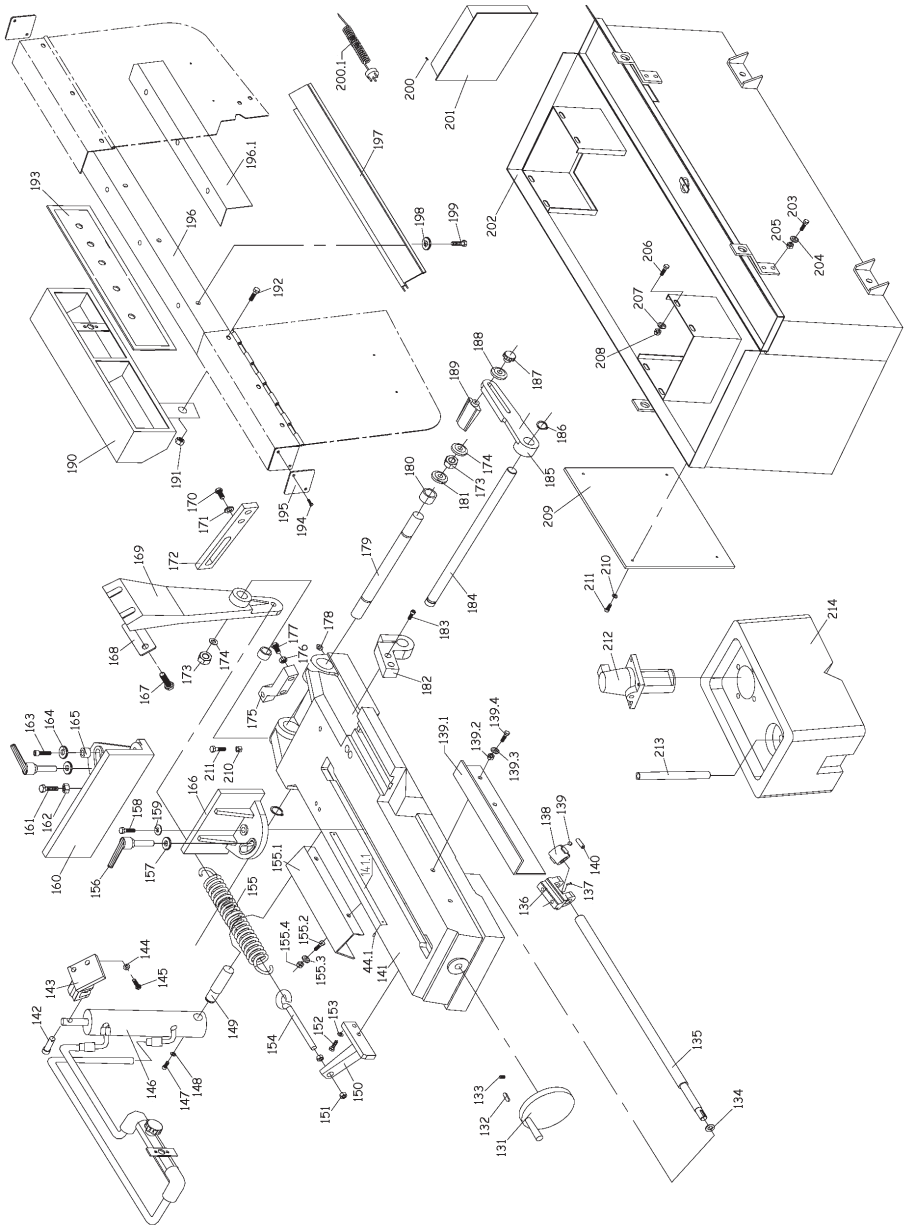

ELECTRICAL CONNECTION….cont

Warning: Never connect any phase wires to the earth terminal of the plug or board. Only fit an approved plug with the correct rated fuse. If in doubt consult a qualified electrician.

Note: Always make sure the mains supply is of the correct voltage and the correct fuse protection is used. In the event of replacing the fuse always replace the fuse with the same value as the original.

Note: If an extension lead is necessary in order to reach the mains supply; The cross section should be checked so that it is of sufficient size so as to reduce the chances of voltage drops. Always fully unwind the lead during use.

Warning: Always use a qualified electrician to wire in the 3ph bandsaw, never wire the bandsaw without any knowledge of electrics, this is extremely dangerous and will cause personal injury or even death.

GUARANTEE

This SIP bandsaw is covered by a 12 month parts and labour warranty covering failure due to manufacturers defects. This does not cover failure due to misuse or operating the bandsaw outside the scope of this manual - any claims deemed to be outside the scope of the warranty may be subject to charges Including, but not limited to parts, labour and carriage costs.

This guarantee does not cover consumables such as bearings, oil or blade etc.

In the unlikely event of warranty claims, contact your distributor as soon as possible.

Note: Proof of purchase will be required before any warranty can be honoured.

TECHNICAL SPECIFICATIONS

Name	18" Metal Cutting Bandsaw
Part number	01597
Input voltage	400v
Circular 45°	150mm
Circular 90°	254mm
Rectangle 45°	150 x 190mm
Rectangle 90°	127 x 457mm
Blade speed	29, 50, 73 & 95 mtr/min
Blade size	3280 x 0.9 x 27mm
Motor power	2HP (1.5kw)
Drive	V-belt
Packed dimensions	1830 x 830 x 1150mm
Net weight	310 kg
Gross weight	385 kg

CONTENTS & ACCESSORIES

1. Cut Off Stop.
2. Coolant Tray.
3. Instruction Manual (not pictured).

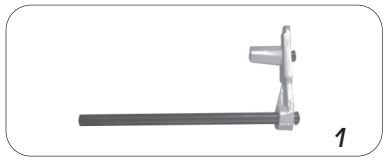

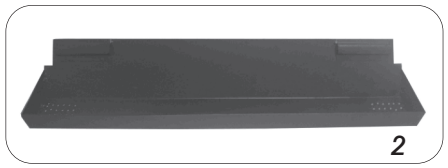

Note: If any of the above are missing or damaged, contact your distributor immediately.

EXPLODED DRAWING….cont

RIGHT SIDE OF THE BOW

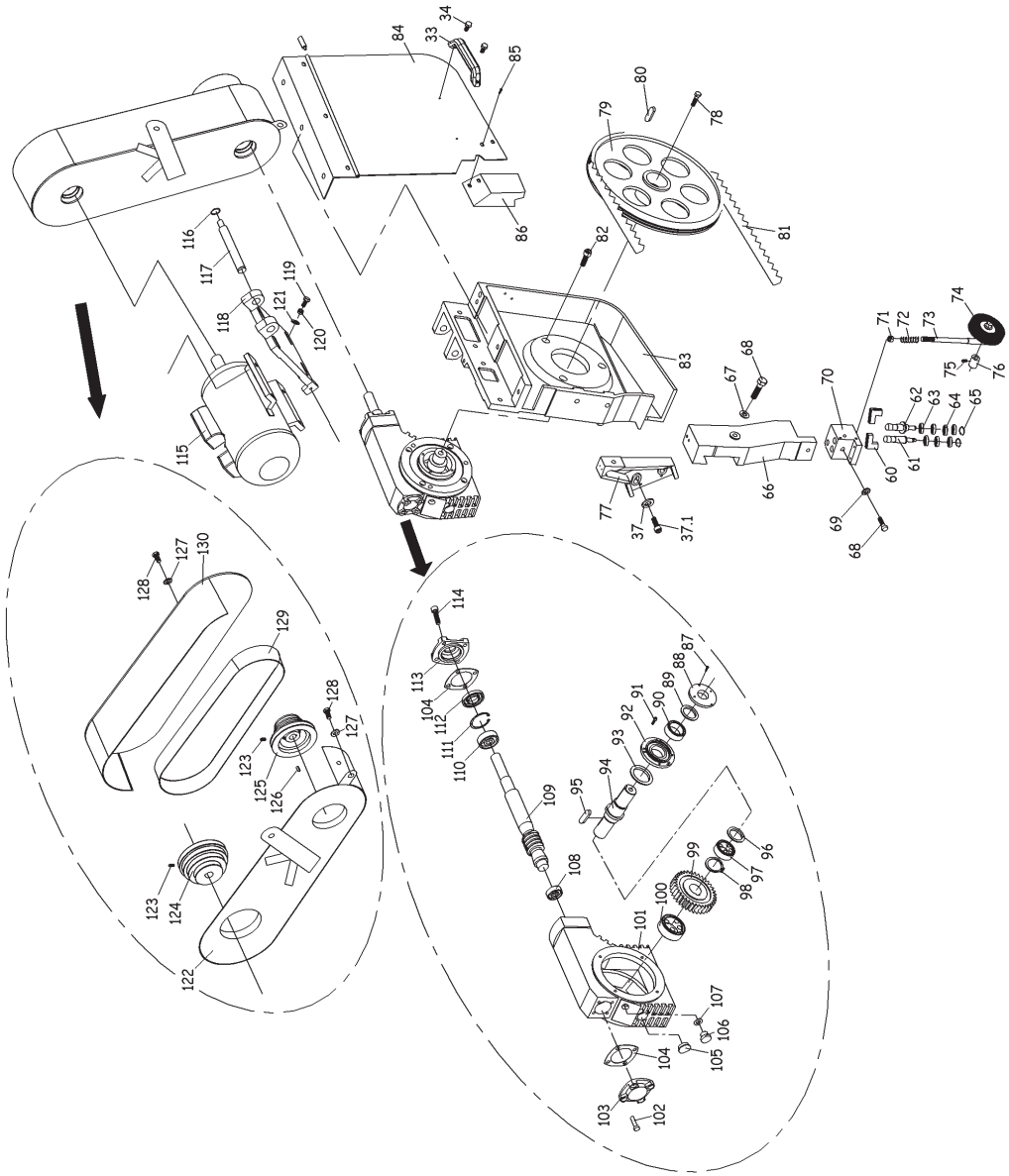

EXPLODED DRAWING

LEFT SIDE OF THE BOW

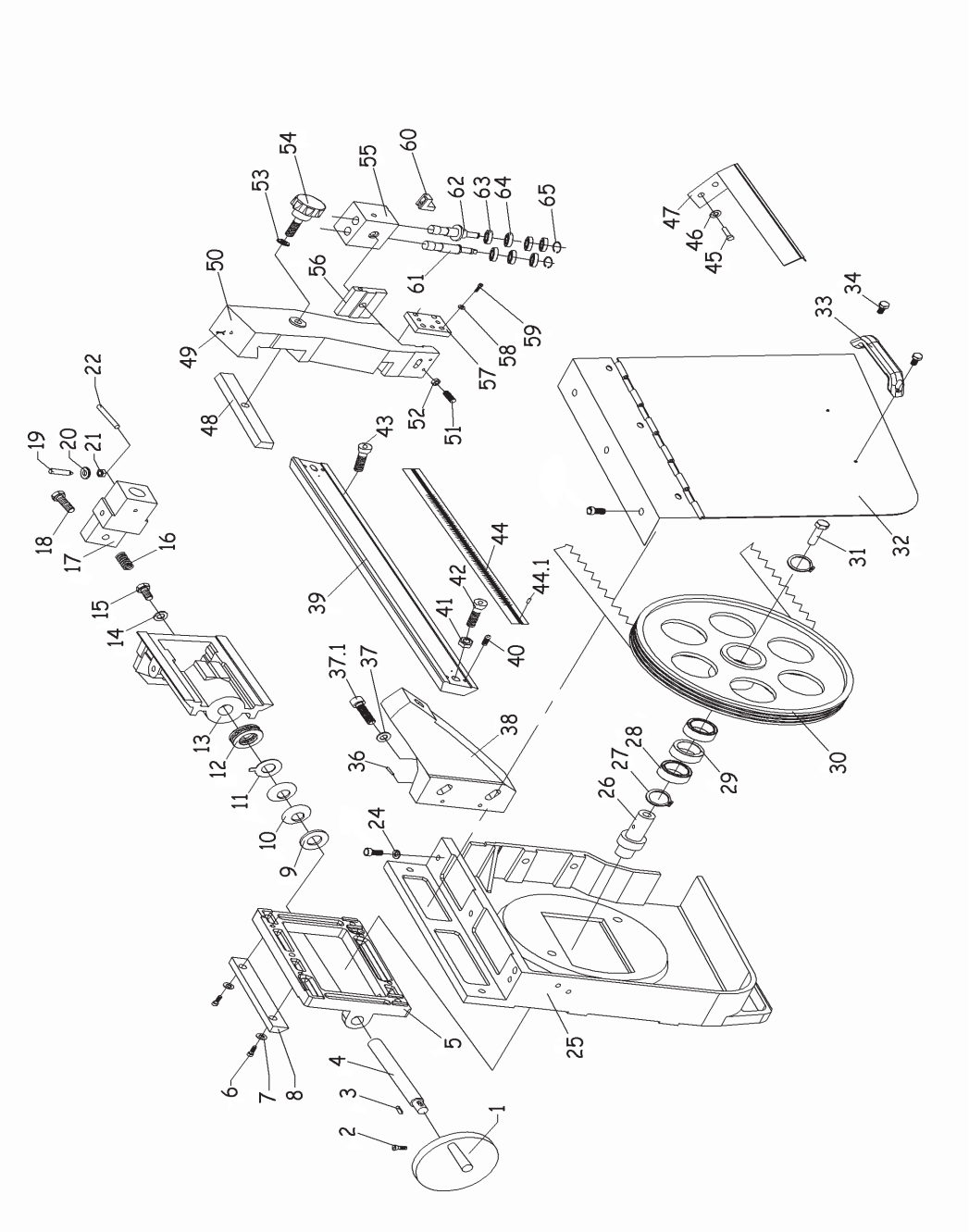

GETTING TO KNOW YOUR BANDSAW

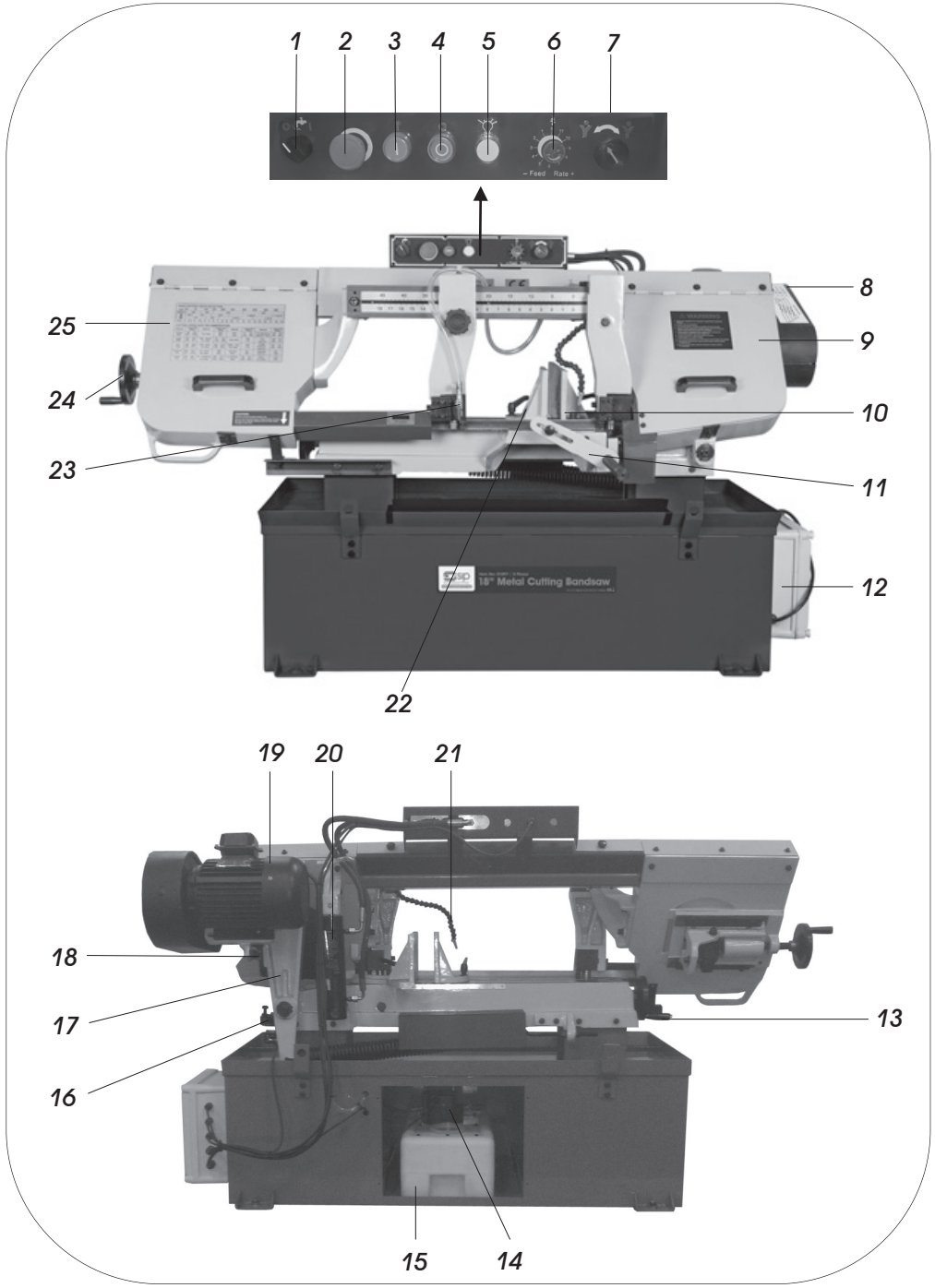

GETTING TO KNOW YOUR BANDSAW….cont

Ref. No.	Description	Ref. No	Description
1.	Coolant Pump Switch	14.	Coolant Pump
2.	Emergency Stop Button	15.	Coolant Tank
3.	Start Button	16.	End Cut Microswitch
4.	Stop Button	17.	Pivot Arm
5.	Power Light	18.	Gearbox
6.	Hydraulic Cylinder Feed Rate Adjuster	19.	Motor
7.	Bow Feed Lock	20.	Hydraulic Cylinder
8.	Belt Guard	21.	Coolant Nozzle
9.	Right Wheel Cover	22.	Movable Vice Jaw
10.	Fixed Vice Jaw	23.	Coolant Tap
11.	Cut Off Stop	24.	Blade Tensioning Knob
12.	Electrical Box	25.	Right Wheel Cover
13.	Vice Handwheel		

CONTROL PANEL

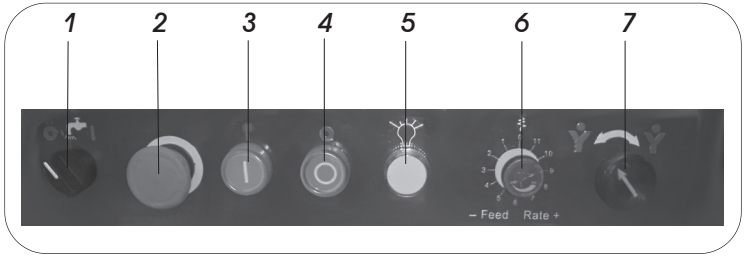

1.	Coolant pump switch	Turns the coolant pump on / off
2.	Emergency stop button	Interrupts power to the system and stops the motor, twist the button until it pops out to bring power back to the machine, can also be used as a stop button.
3.	Start button	Turns the machine on.
4.	Stop button	Stops the machine.
5.	Power light	When lit the machine is ready for operation.
6.	Hydraulic cylinder feed rate adjuster	Fine tunes the feed rate on the hydraulic cylinder, 9 is the fastest and 1 is the slowest rate of decent.
7.	Bow feed lock	Turning the knob anti-clockwise lowers the saw bow at the rate you have set on the hydraulic cylinder, turning the knob clockwise will locks the bow into position.

TROUBLESHOOTING

Symptom	Possible cause	Solution
Unusual wear on side or back of blade.	1. Blade guides are worn. 2. Blade guides not properly adjusted. 3. Blade guide brackets are loose.	1. Replace blade guides. 2. Adjust as described in manual (pg15). 3. Tighten blade guide brackets.
Excessive blade breakage and teeth ripping from the blade.	1. Material is loose in the vice. 2. Incorrect speed or feed. 3. Blade is too coarse. 4. Workpiece material is too coarse. 5. Incorrect blade tension. 6. Blade is in contact with material before bandsaw is started. 7. Blade is rubbing on the wheel flange. 8. Blade guides are misaligned. 9. Blade is too thick. 10.Bad weld on blade.	1. Clamp the material securely. 2. Adjust speed or feed. 3. Use correct blade for material. 4. Use the saw at slower speed and use a smaller tpi blade. 5. Adjust blade tension (pg16-17) so that it does not slip on the wheel. 6. Place the blade in contact with the material only after the saw has started. 7. Adjust the blade tracking (pg18). 8. Adjust blade guide alignment. 9. Use correct thickness blade. 10.Re-weld or replace blade.
Motor overheating.	1. Blade tension too high. 2. Drive belt tension too high. 3. Blade too coarse or too fine. 4. Gears need lubrication. 5. Blade is binding in the cut.	1. Reduce blade tension. 2. Reduce belt tension. 3. Use a blade designed for the material. 4. Lubricate the gears. 5. Decrease feed and speed.
Blade is twisting.	1. Blade tension is too high. 2. Blade is binding in the cut.	1. Decrease blade tension. 2. Decrease feed pressure.
Bad, rough or crooked cuts.	1. Blade is too coarse. 2. Blade guide assembly is loose. 3. Blade guides are spaced out too far. 4. Incorrect speed. 5. Blade is blunt. 6. Inadequate blade tension. 7. Blade guide bearings not properly adjusted. 8. Feed pressure too much.	1. Use a finer blade. 2. Tighten the guide assembly. 3. Move guides closer to the material. 4. Adjust speed. 5. Replace the blade. 6. Increase blade tension a little at a time. 7. Adjust blade guide bearings. 8. Reduce feed pressure by increasing the spring tension on the arm.
Premature blade dulling.	1. Blade tpi is too high. 2. Incorrect speed - too fast. 3. Inadequate feed pressure. 4. Hard spots or scale on the material. 5. Blade installed backwards. 6. Insufficient blade tension. 7. Work hardened material especially stainless.	1. Replace with a smaller tpi blade. 2. Reduce speed. 3. Increase feed pressure by unscrewing tension bar. This will decrease the spring tension on the arm. 4. Reduce speed, increase feed pressure. 5. Remove blade, twist inside out and reinstall. 6. Increase blade tension. 7. Increase feed pressure by reducing spring pressure.

MAINTENANCE INSTRUCTIONS….cont

GEARBOX OIL CHANGE

Note: The gearbox oil should be replaced after the first 50 hours of running and then every 5 months after that, failing to do this will reduce the life of the gearbox, and void your warranty.

- Disconnect from the mains supply.
- Lower the saw bow to its lowest horizontal position.
- Remove the oil plug (Fig.15, A) and syphon the used oil out.
- Fill the gearbox with EP90 gear oil until its around the red dot on the oil sight glass.
- Refit the oil plug.

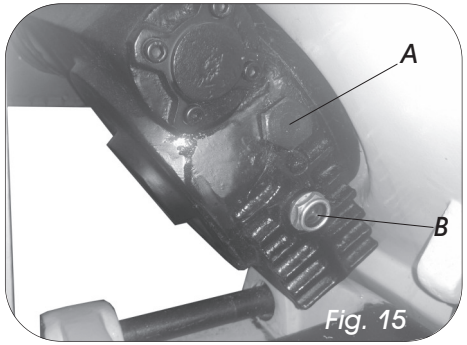

Fig. 15

Note: Contact your local authority on how / where to dispose of the waste oil, we recommend refilling with EP90 gear oil.

GENERAL MAINTENANCE

- Do not used compressed air to clean the bandsaw, this can cause metal fillings to go into the guide bearings and other parts of the bandsaw.
- Always remove the metal fillings from the blade guides after use.
- Wipe the bandsaw down with a dry cloth.
- Check the guide bearings regularly making sure they are clean and properly adjusted.
- Always check to make sure the wire brush properly adjusted and clean.
- Always disconnect from the mains supply before carrying out any maintenance.

ASSEMBLY INSTRUCTIONS

UNPACKING

- Remove the bandsaw from the packaging, check the bandsaw for any signs of damage or missing items prior to assembly.

Note: If any items are missing or damaged, ***DO NOT*** use the machine; contact your distributor immediately.

- Whist still on the wooden base, move the bandsaw to where it is too be located.
- Unbolt the bandsaw from the wooden base.

Danger / Caution: At least 2 persons are required to remove this bandsaw from it`s packaging it is extremely heavy! Failing to follow this can have serious consequences and could lead to personal injury and/or the possibility of damage.

- Use proper lifting equipment to move the bandsaw from the wooden base and in to your desired location.

FITTING THE CUT OFF STOP

- Slide the cut off stop (B) through the cut off stop bracket (11) on the front of the bandsaw, secure using the bolt on the side of the retaining bracket.
- The cut off stop is ready to be used.

CLEANING THE SURFACES PRIOR TO OPERATION

Before using the bandsaw it is best to clean the rust protected surfaces using kerosene, diesel oil or mild solvent. Never use cellulose based solvents such as paint thinner or lacquer thinner as these will damage the painted surfaces.

REMOVING THE TRANSIT BOLT

Before the bandsaw can be used the transit bolt and bracket must be removed; this is situated at the end of the saw bow and bed (see right picture). Keep the bolt and bracket as you may need these if the bandsaw needs to be moved in transit to a different location (Fig. 1).

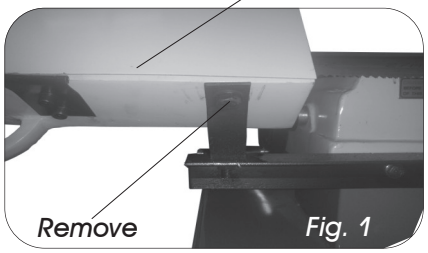

Fig. 1

SETTING THE BLADE SPEED

Prior to changing the blade speed make sure the mains is disconnected, Loosen and remove the belt guard bolt and lift up the cover, this will allow access to the belt so it can be adjusted.

- Loosen the motor bracket bolt (Fig.2, A), this will allow you to move the motor more freely.

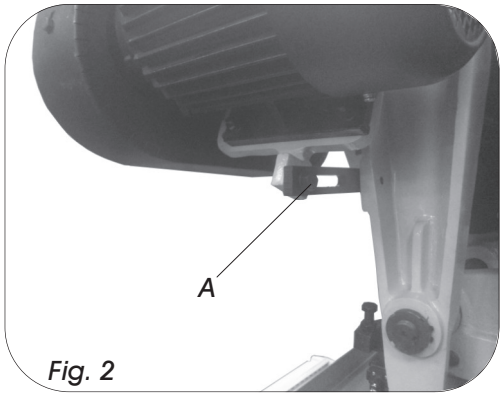

Fig. 2

- Move the belt to the desired speed (Fig.3).

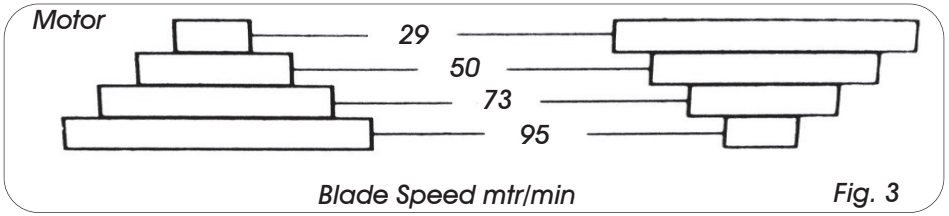

Fig. 3

- Once the belt has the desired speed adjustment, re-tension the motor and secure in place by tightening the bolt (Fig.2).
- Close the belt guard and refit and re-tighten the screw.

On page 15 is a table which will give you some idea of what speed materials should be cut at.

- Now adjust the left hand guide arm in the following way.
- Ensure both cap head bolts (Fig.13, D) are tight before any adjustment is made.
- Loosen the nuts on screws (Fig.13, B, C & F) but do not remove.
- Repeat step 5 for adjusting screws (B & C) for the angle of the blade.
- If the blade is not level to the right hand side of the blade, then adjust cap head bolt (E) to move the guide block inwards, or screws (F) to move it towards you.
- Once all the adjustments have been made, then tighten cap head bolt (A) back up and tighten all four nuts back up on screws (B, C & F).

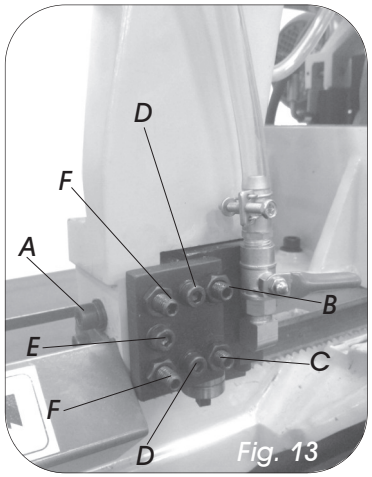

Fig. 13

FILLING THE HYDRAULIC CYLINDER WITH OIL

The hydraulic system on this bandsaw consists of a hydraulic cylinder which is operated by a needle valve, the saw bow is raised by hand, and as this is done oil passes to the underside of the piston. The restricted flow is controlled by the feed rate control knob and governs the speed of which the saw bow lowers. If it becomes necessary to fill the hydraulic cylinder with oil then follow the steps below.

- Disconnect from the mains supply.
- Lower the saw bow into its lowest position.
- Remove the screw on top of the hydraulic cylinder (Fig.14, A) and fit a 1/8" bsp tail pipe fitting into its place.
- Place a hose over the tail pipe fitting and put the other end of the hose into a bottle of hydraulic oil.
- Raise and lower the saw bow a few times until the oil starts to seep out from the hydraulic cylinder.
- Once topped up take off the hose and tail pipe.
- Refit the screw.

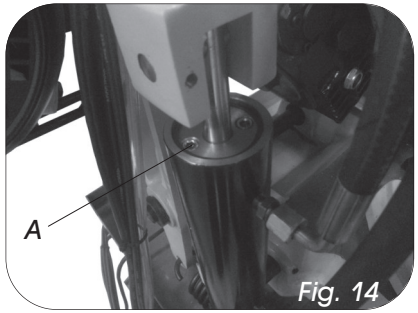

Fig. 14

Note: The outer bearing shaft is eccentric and is the one to adjust, the inner bearing shaft is fixed and can not be adjusted.

- Remove the carbide guide by taking out the cap head bolt (Fig. 11 ,A).
- Undo the hex screw slightly (Fig. 11, B).
- With a spanner turn the eccentric shaft (Fig. 11, C) until there is a gap of about 0.001", you should just be able to slide a piece of paper between the gap.
- Once the eccentric shaft has be adjusted, re-tighten the hex screw (B) and refit the carbide guide.
- Repeat steps 2-5 for the opposite eccentric shaft.

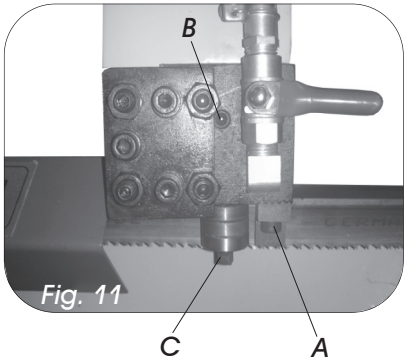

Fig. 11

BLADE GUIDE ALIGNMENT

- Start with right fixed arm to begin with, place a set square on the bed and against the blade to see what adjustment is needed (Fig. 12).
- Make sure both cap head bolts (D) are tight before any adjustment is made.
- Slightly slacken off the cap head bolt (A) but do not remove.
- Slacken the nuts on screw (B & C), but do not remove them.
- Adjusting screw (B) will move the top part of the blade, or adjusting screw (C) will move the bottom part of the blade, screwing inwards will bend the blade towards you, screwing outwards will bend it away from you.
- Once the right side of the blade is adjusted correctly, then tighten both nuts up and re-tighten cap head bolt (A).

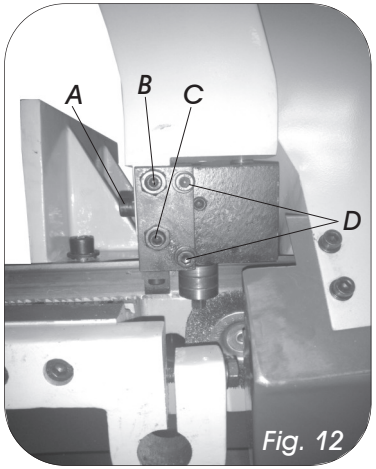

Fig. 12

Material	Speed M/Min (FPM)	Material	Speed M/Min (FPM)
Carbon Steel	60 - 108 (196 - 354)	*Tool Steel*	62 (203)
Steel Section	54 - 67 (180 - 220)	*High Speed Tool Steel*	23 - 36 (75 - 118)
Thin Tube	54 - 67 (180 - 220)	*Cold Work Tool Steel*	95 - 213 (29 - 65)
Aluminium Alloy	67 - 163 (220 - 534)	*Hot Work Tool Steel*	62 (203)
Copper Alloy	70 - 147 (229 - 482)	*Oil Hardening Tool steel*	62 - 65 (203 - 213)
Alloy Steel	34 - 98 (111 - 321)	*Free Machining Stainless Steel*	46 - 62 (150 - 203)
Mild Steel	75 (246)	*Gray Cast Iron*	33 - 75 (108 - 255)
Water Hard Tool Steel	242 (74)	*Ductile Austenitic Cast Iron*	65 - 85 (20 - 26)
Stainless Steel	26 (85)	*Malleable Cast Iron*	98 (321)
Cold Rolled Stainless Steel	26 - 62 (85 - 203)		

Note: The above table is an approximate guide reference only, various factors mean some materials may require different speeds to the ones quoted.

ADJUSTING THE VICE

- Loosen both lever locks (Fig. 4).
- Slide the fixed vice jaw to the left and move it to your desired angle.
- Once set at your desired angle re-tighten the lever lock.
- Place the material to be cut flush against the fixed vice jaw.
- Slide the movable vice jaw up tight against the material and tighten the lever lock.
- For maximum cutting at 90° remove the fixed vice jaw and bolt it down on the left hand side hole (Fig. 5, B).

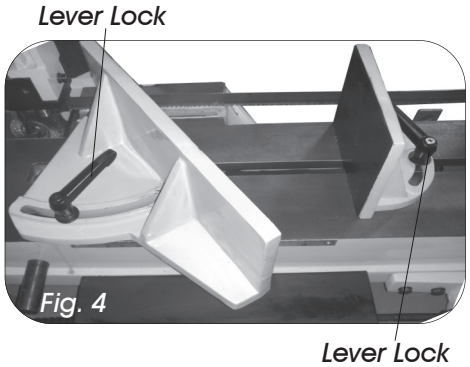

Fig. 4

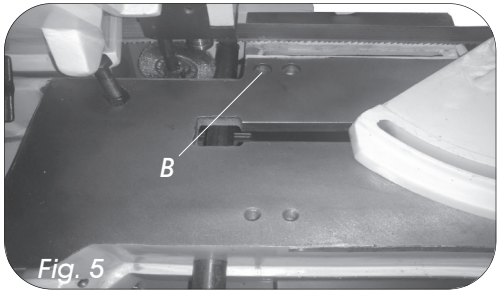

Fig. 5

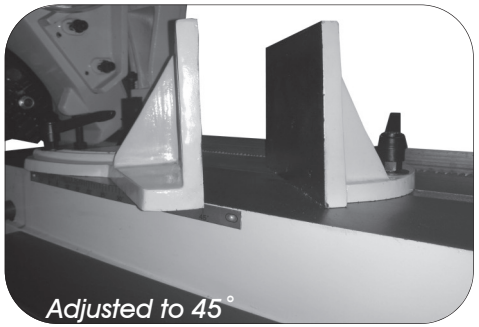
Adjusted to 45°

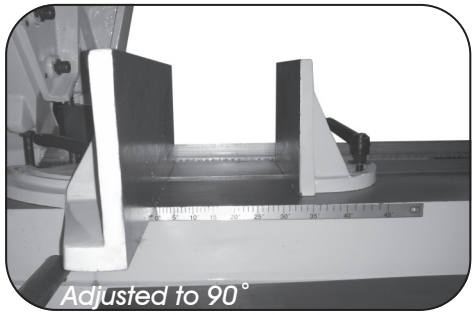
Adjusted to 90°

Note: Always tighten both lever locks prior to making a cut, leaving them loose will allow the jaws to slip and could damage the material or even cause personal injury.

TENSIONING THE BLADE

Caution: DO NOT over tension the blade as this will warp and stretch the blade, if the blade warps or stretches then it must be replaced.

Note: Before tensioning the blade make sure the blade is properly aligned, If not, align before attempting to tension.

Blade tension is important for the proper operation of the bandsaw.

To set the blade correctly use the following steps.

To tension the blade, lift up the left wheel cover and turn the blade tension hand-wheel (Fig. 10, A) clockwise, a tension scale (B) is located underneath the wheel. The scale is graduated to indicate blade tension of 20,000, 25,000 and 35,000 pounds per square inch (psi). For carbon blades (similar to the one supplied with the machine) the blade should be tensioned at 20,000 psi. For bi-metal blades, the blade should be tensioned at 25,000 or 35,000 psi. Always release the blade tension at the end of each work day to prolong blade life.

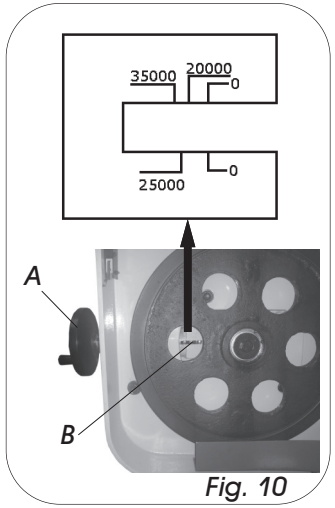

Fig. 10

Note: The tension scale is a guide only; there are many factors that can alter the ideal tension of the blade.

BLADE GUIDE BEARING ADJUSTMENT

Note: The correct guide bearing adjustment is very important, this will make the blade run smoother and evenly without any snagging or twisting whilst the blade is running. It will also prolong the blade life.

MAINTENANCE INSTRUCTIONS

CHANGING THE BLADE

Caution: Before carrying out any maintenance always disconnect the bandsaw from the mains supply.

Caution: We strongly advise wearing gloves for protection when changing blades, blades are sharp and dangerous and can cause personal injury.

Danger / Caution: Blades are sharp use extra care when removing, installing or handling.

Note: The bandsaw was designed to use a 3280 x 0.9 mm size blade, always use this size blade.

- Disconnect from the mains supply.
- Raise the saw bow to around 6" and turn the feed control knob clockwise to lock it in position.

- Slide the left blade guard arm (Fig. 9, A) to the right.
- Take the two cap head bolts (Fig. 9, B) out and remove the adjustable blade guard bracket (Fig. 9, C).
- Open both wheel covers.
- Release the blade tension by turning the blade tension handwheel anti-clockwise.

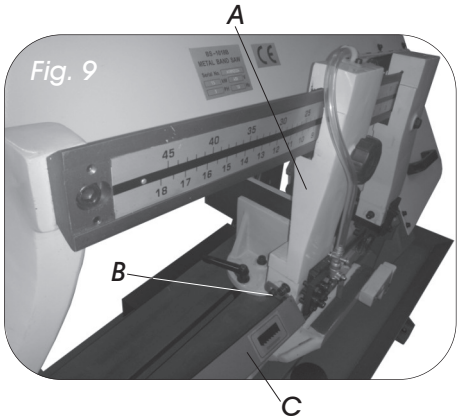

Fig. 9

- Remove the blade from both wheels and slide it out of both blade guides.
- Before fitting the new blade its best to clean the wheels of any swarf.
- Place the new blade onto the wheels and between the blade guides.
- Tension the blade, re-adjust the blade guides and track the blade.
- Once adjustments have been made close both wheels covers and lower the saw bow.

OPERATING INSTRUCTIONS….cont

FILLING THE COOLANT TANK

Note: We recommend the use of water soluble coolant, this will prolong the blade life and make the cut more efficient.

- Slide the coolant tank out from the rear of the bandsaw (Fig. 6).
- Ensure the filter is fitted and fill with fresh coolant.
- Slide the coolant tank back onto the bandsaw panel, ensuring that the coolant hose is situated over the filter.

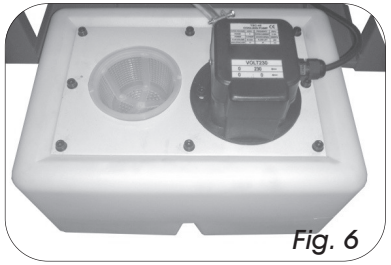
Fig. 6

ADJUSTING THE GUIDE ARM

- Loosen the guide arm knob (Fig. 7).
- Slide the guide arm close to the material that is to be cut.
- Re-tighten the guide arm knob.

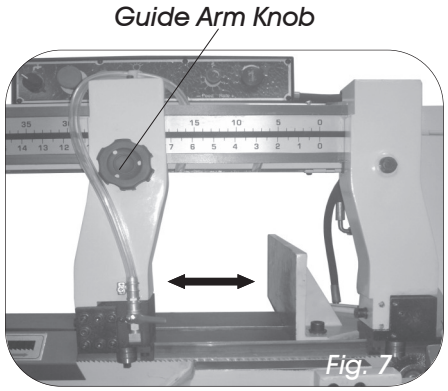

Fig. 7

HYDRAULIC CYLINDER ADJUSTMENT

The hydraulic cylinder has an adjustable rate of decent, this can be adjusted by turning the hydraulic cylinder feed rate adjuster (Fig. 8) clockwise to slow down the rate of decent, or anti-clockwise to speed up the rate of decent. The hydraulic cylinder can be stopped in any position by turning the hydraulic cylinder feed rate adjuster , when the knob is fully turned clockwise the cylinder will stop descending.

Hydraulic Cylinder Feed Rate Adjuster

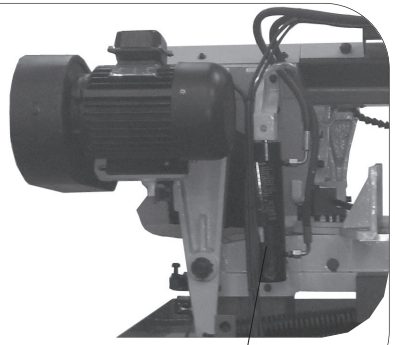

Hydraulic Cylinder

Fig. 8

Note: Check maintenance on how to replace the oil or top up the hydraulic cylinder.

CUTTING WITH THE BANDSAW

Danger: Before attempting to cut always ensure all covers are in place, undamaged and secure.

Note: The harder the material to be cut the slower the speed should be.

- Disconnect from the mains supply.
- Change the blade speed to suit the material that is to be cut (see pg14 changing the blade speed).
- Raise the saw bow to a vertical position.
- Adjust the cut length stop to your desired position.
- Set the vice angle to your desired position.
- Open the vice and insert the material to be cut then close the vice to secure.
- Move the two adjustable blade guides closer to the material, but make sure it doesn't foul against it.
- Adjust the rate of descent of the arm as described on pg17 so that it is creeping slowly down towards the material, shut off the hydraulic cylinder when the blade gets close to the material, do not start cutting on a sharp edge, file it off first.
- Plug in to the mains supply and turn the coolant pump on.
- Start the saw.

Caution: Do not turn the machine on until the material is secured and the blade has been lowered just above the material.

- To bring the blade in to contact with the material to be cut, turn the feed control knob, if the blade jams immediately turn the bandsaw off and refer to the trouble-shooting guide.
- Once the cut is complete then turn the machine off and remove the material.

Caution: Never remove the material when the bandsaw is still running, always switch the machine off before attempting to remove the material, failure to do this could lead to serious personal injury.

Caution: Never start the bandsaw with the blade in contact with the workpiece. Allow the saw to reach full speed before commencing cut.